REVISIONS				
ECO	REV.	DESCRIPTION	DATE	APPROVED
–	A	RELEASE FOR PRODUCTION	01-26-94	JM JI
1272	B	SCHEMATIC CORRECTION: CHANGE C11 VAL	03-11-94	JM JI
1289	C	CHG L1 SPECS; CHG C3 VALUE; CHG C4 VOLTS	05-11-94	JM JI
1311	D	CHANGE CAP VOLTS – C2,3,4,5,8,9,10,11	07-26-94	JM JI
1313	E	CHG L1,L2,L3 SPECS	07-28-94	[illegible]

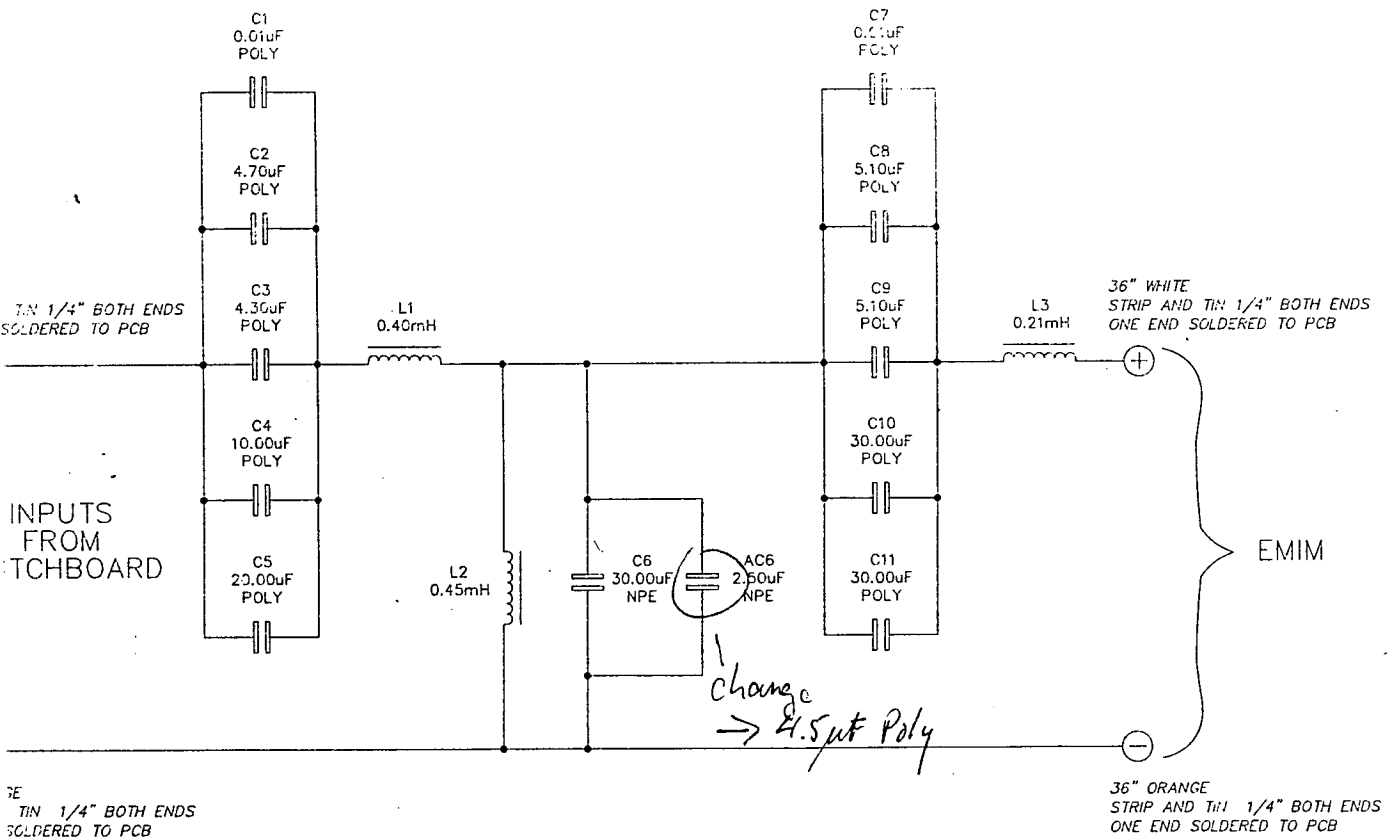

Bill of Material
07-28-94

Inductors

Ref.	Value	Tol% ③	Amps ②	DCR	DQ@1k	Type	Air Gap	Material	Size
L1	0.40mH ①	1	-	.16	15.70	SLUG	-	IRON	10x40mm
L2	0.45mH ①	1	-	.15	18.30	SLUG	-	IRON	10x40mm
L3	0.21mH ①	1	-	.12	10.70	SLUG	-	IRON	10x40mm

Capacitors

Ref.	Value	Tol%	D.F.%	(Hz)	Volts	Type	Brand
C1	0.01uF	20	0.1	1K	630 AC	POLYSTY	WONDER
C2	4.70uF	2	0.1	1K	400 DC	POLYPROP	SOLEN
C3	4.30uF	2	0.1	1K	400 DC	POLYPROP	SOLEN
C4	10.00uF	2	0.1	1K	400 DC	POLYPROP	SOLEN
C5	20.00uF	2	0.1	1K	400 DC	POLYRPOP	SOLEN
C6	30.00uF	2	4.0	1K	100 AC	NPE	TECATE
AC6	2.50uF	2	4.0	1K	100 AC	NPE	TECATE
C7	0.01uF	20	0.1	1K	630 AC	POLYSTY	WONDER
C8	5.10uF	2	0.1	1K	400 DC	POLYPROP	SOLEN
C9	5.10uF	2	0.1	1K	400 DC	POLYPROP	SOLEN
C10	30.00uF	2	0.1	1K	400 DC	POLYPROP	SOLEN
C11	30.00uF	2	0.1	1K	400 DC	POLYPROP	SOLEN

PROTECTION DEVICES – None

PCB: MATERIAL: FR-4 DOUBLE-SIDED; COPPER WEIGHT: 3 Oz.
CLIPS: NONE
WIRES: MONSTER SPECIAL – ISI P/N 603-7097 WHITE
ISI P/N 603-7101 ORANGE

① GenRad DigiBridge @1kHz.

② DC amps where inductance changes by 10%.

③ Tolerance applies to Inductance, DCR, and Q

④ Test set-up as shown:

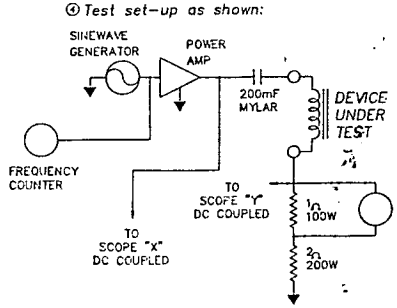

APR 11 1995

INFINITY SYSTEMS, INC. PROPRIETARY
This document contains confidential and proprietary information [illegible] the property of Infinity Systems, Inc. and must not be disclosed [illegible] duplicated for others except [illegible] granted by Infinity Systems, Inc.

Infinity Systems Inc.

EPSILON
CROSSOVER SCHEMATIC – MIDRANGE SECTION
P/N: .020...6996
DWG NO: 020-6996-1972-49B
DRAWN BY: R. RAHL
DATE: 11-01-93 SCALE: N/A
APPROVED: JM JI 01-26-94
CAD FILE NAME: EPSILON\MIDRANGE\6996E
TOLERANCES: ANG: ± = .5° FRACT. ± = 1/32
DECIMALS: .XX ± = .01 .XXX ± = .005
REVISION: E SHEET 1 OF 1

REVISIONS			
ECO	REV.	DESCRIPTION	DATE
–	A	RELEASE FOR PRODUCTION	01-25-
1289	B	CHANGE OUTPUT WIRE LENGTHS	05-11-
1311	C	CHANGE CAP VOLTS – C1,2,3,4,6	07-28-

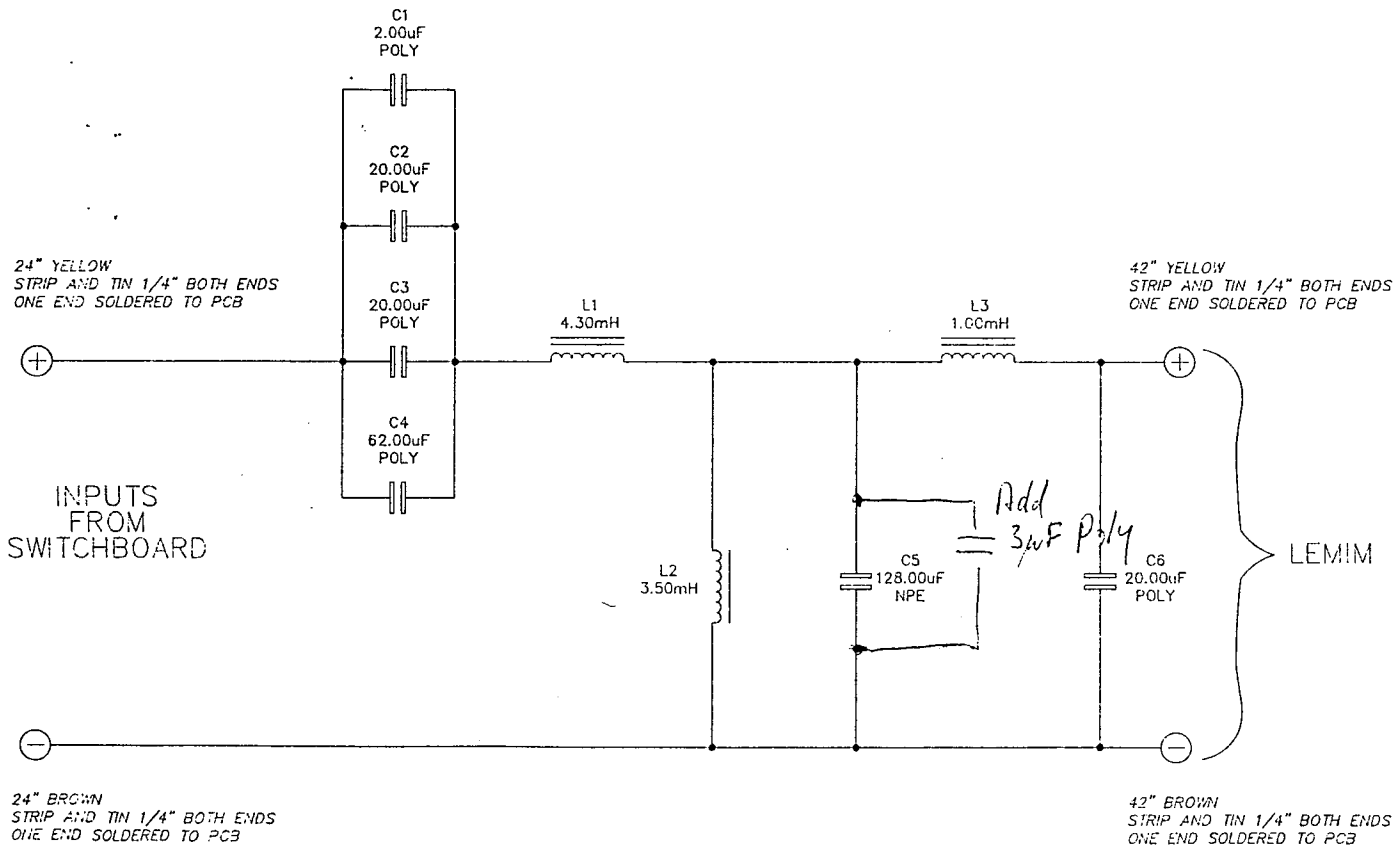

Bill of Material
07-26-94

Inductors

	Ref.	Value	Tol% ③	Amps ②	DCR	DQ21k	Type	Air Gap	Material	S
SEE NOTE	L1	4.30mH ①	2	–	.13	–	EI	.50	STEEL LAM	66x
	L2	3.50mH ①	2	–	.12	–	EI	.50	STEEL LAM	66x
	L3	1.00mH ①	2	–	.06	–	EI	.38	STEEL LAM	57x

NOTE: INDUCTORS TO HAVE CORES POTTED

Capacitors

Ref.	Value	Tol%	D.F.%	(Hz)	Volts	Type	Brand
C1	2.00uF	2	0.1	1K	400 DC	POLYPROP	SOLEN
C2	20.00uF	2	0.1	1K	400 DC	POLYPROP	SOLEN
C3	20.00uF	2	0.1	1K	400 DC	POLYPROP	SOLEN
C4	62.00uF	2	0.1	1K	400 DC	POLYPROP	SOLEN
C5	128.00uF	2	6.0	1K	100 AC	NPE	–
C6	20.00uF	2	0.1	1K	400 DC	POLYPROP	SOLEN

PROTECTION DEVICES – None

PCB: MATERIAL: FR-4 DOUBLE-SIDED; COPPER WEIGHT: 3 Oz.
CLIPS: NONE
WIRES: MONSTER SPECIAL – ISI P/N 603-7096 YELLOW
ISI P/N 603-7100 BROWN

① GenRad DigiBridge @1kHz.

② DC amps where inductance changes by 10%.

③ Tolerance applies to Inductance, DCR, and Q

④ Test set-up as shown:

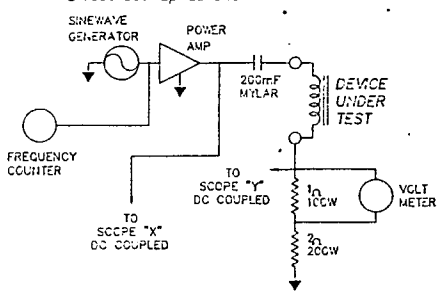

Infinity Syst

EPSILON

CROSSOVER SCHEMATIC – MIDBASS	
P/N: .020...6997	
DWG NO: 020-6997-C1973-49E	
DRAWN BY: R. RAHL	
DATE: 11-02-93	
APPROVED: JM	01-26-9
CAD FILE NAME: EPSILON\MIDBA	
TOLERANCES: ANG: ± = .5°	
DECIMALS: .XX ± = .01 .XXX	

APR 11 1995

Infinity **Service Bulletin**

Modification of Servo Control Unit for Infinity *Epsilon.*

Infinity Epsilon SCU Model IF80008. Service Bulletin # 9501 - March 1995. Two pages + PCB layout.

To improve the protection circuit and compatibility to a wider range of power amplifiers, the following modifications should be implemented.

Equipment needed:

Screwdriver Philips Size 2
Cutter
Soldering equipment
Generator, 25 Hz Sinus signal, low output impedance.
Oscilloscope
Two hook-grips / insulated miniature crocodile clips
Connector: RCA /Phono jack to BNC (From "bass output" to Oscilloscope)
Trimming driver for adjusting potentiometers.

For each SCU you need:

2 pcs. of thin insulated single wire, 23 cm each.
4 cm adhesive insulating tape to fasten wires on PCB (soldering side)
4 pcs. 220nF, 7,5 mm PIN space, e.g. WIMA MKS3 0,22uF / 10% / 63V RM7,5 (Red)
2 pcs. 22nF, 5,0 mm PIN space, e.g. WIMA MKS2 0,022uF / 10% / 63V RM5 (Red)
2 pcs. 470nF, 10 mm PIN space, e.g. WIMA MKS4 0,47uF / 10% / 63V RM10 (Red)

It is possible to get better capacitors than the above, but the WIMA should be relatively easy to get and they are better than the ones used originally.

Open the SCU by removing both the top and the bottom cover (6+6+4+3 = 19 screws). Now that the chassis is not stabilized by the covers, please be careful not to wrench it.

All components, wires and relevant points on the PCB are shown by labels on the attached PCB-layout.

SCU Off:

1. Open the signal path between **LIC4, PIN-7** and **PR16** by **cutting** the PCB line on the **soldering** side close to PR16 (see attached PCB layout, **CUT L**)
2. Open the signal path between **RIC4, PIN-7** and **PR12** by **cutting** the PCB line on the **component** side (see attached PCB layout, **CUT R**)
3. Mount the thin wire (**LINE L**) on the **soldering** side of the PCB from **LIC4, PIN-8** (use the thicker PIN on **LC24**) to the PIN (now open end) of the resistor **PR16**.

4. Mount the other thin wire (**LINE R**) on the **soldering** side of the PCB from **RIC4, PIN-8** (use the thicker PIN on **RC24**) to the PIN (now open end) of the resistor **PR12**.

5. Change **LC1** & **RC1** from 1uF to **220nF**
6. Change **LC2** & **RC2** from 1uF to **220nF**
7. Change **LC4** & **RC4** from 8,2nF to **22nF**
8. Change **LC5** & **RC5** from 4,7uF to **470nF**

9. Fasten the two wires (in the middle) to the PCB (soldering side) using the adhesive tape.

10. Turn the **gain** adjustment potentiometer at the rear, full clock-wise (**+6dB**)
11. Turn **LVR2** & **RVR2** on the PCB, full **counter clock-wise**.
12. Turn **LVR3** & **RVR3** on the PCB, full **counter clock-wise**.

13. Make sure that the correct **mains voltage** is chosen on the mains input selector (combined with the fuse on the left rear).

SCU On:

14. **LEFT** channel: Using a **25Hz, 200mV peak** (141mV-RMS) signal on the "**left servo"-input** (between PIN 1 and PIN 4), adjust **LVR1** so that the "**Left bass out"** (RCA/phono jack) is **0,7V peak** (495mV-RMS).
15. Adjust **LVR2** so that "Left bass out" is **0,0 V**
16. Adjust **LVR3** so that "Left bass out" is **12,5V peak** (8,84V-RMS)

17. **RIGHT** channel: Using the same **25Hz, 200mV peak** (141mV-RMS) signal on the "**right servo"-input** (between PIN 1 and PIN 4), adjust **RVR1** so that the "**Right bass out"** (RCA/Phono jack) is **0,7V peak** (495mV-RMS).
18. Adjust **RVR2** so that "Right bass out" is **0,0 V**
19. Adjust **RVR3** so that "Right bass out" is **12,5V peak** (8,84V-RMS)

SCU Off:

20. Turn the Gain adjustment potentiometer at the rear down to **-6 dB** (approx. for Mark Levinson No. 23.5) or whatever is needed for the power amplifier that you recommend. Better too low than too high.
21. Re-assemble the SCU.(3+16 screws).

Epsilon SCU, PCB layout seen from the component side.

All components, wires and relevant points for this modification are shown by labels on this PCB-layout. This is what the labels look like: Example: LYR2

REAR side of the SCU

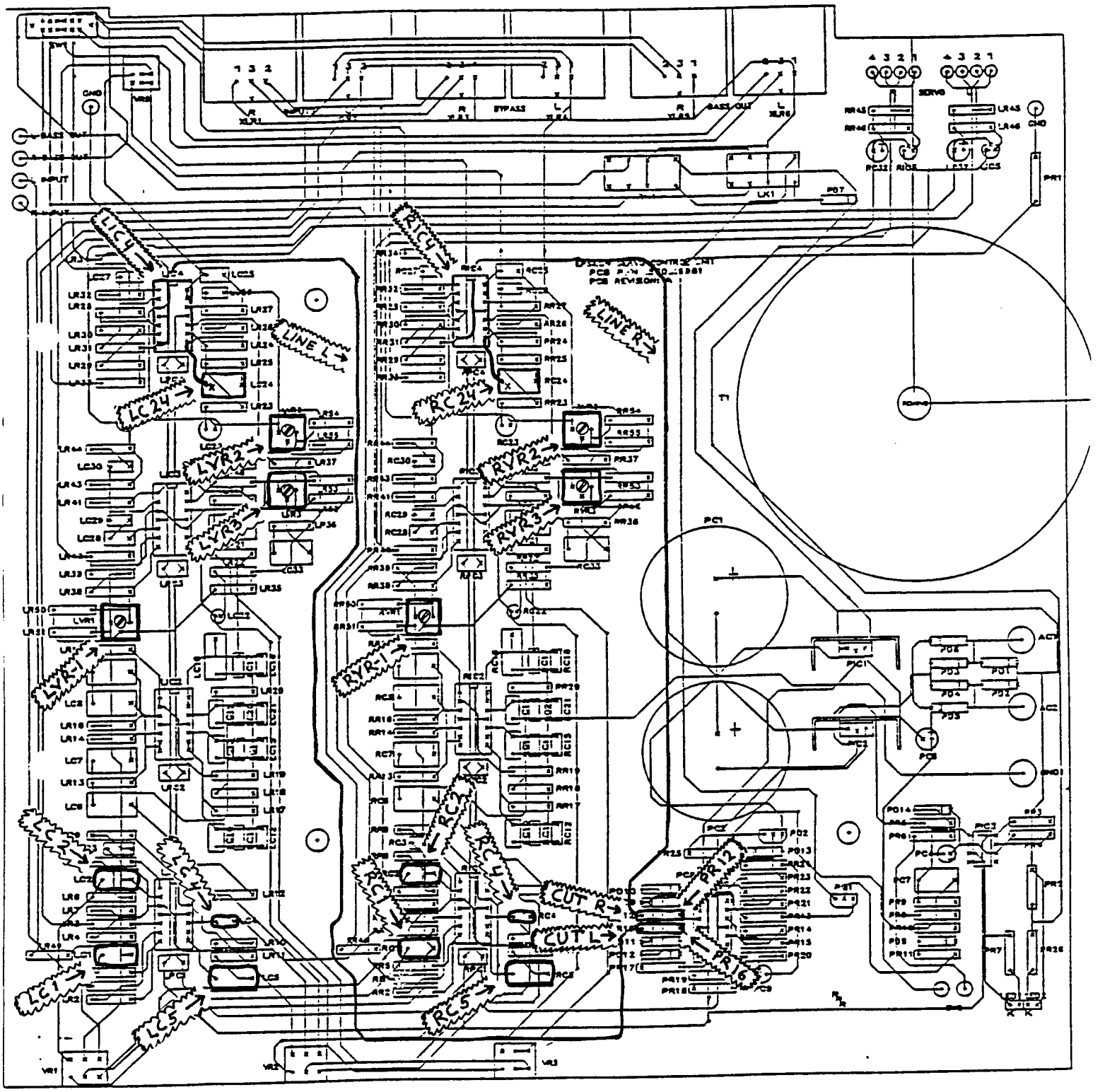

FRONT side of the SCU

Infinity

9400 Owensmouth Ave. Chatsworth, Ca. 91311

FILE COPY

ENGINEERING CHANGE

DATE 02-02-95 ECO 1343

PRODUCT	NUMBER	INTERN.	EXTERN.	REV.
EPSILON ACCELEROMETER BRD SCHEMATIC & PCB	NOTED	XXX		

BOM COST INCREASE/DECREASE OF $ .18 LABOR COST INCREASE/DECREASE OF $	CHANGE REQUESTED BY: ENGINEERING (JM)	EST. EFF. DATE

REASON FOR CHANGE TEMPERATURE STABILITY	DISPOSITION OF STOCK N/A	PUR.	MAT'L

MARK CARTON YES [ ] NO [XXX] TYPE OF MARK	CHANGE AFFECTS [XXX] BOM UPDATE [XXX] DRAWING CHANGE

DESCRIPTION OF CHANGE:

.020...7507 PIEZO ACCELEROMETER ADAPTER BOARD ASSY

R1 - WAS: 470K IS: 8.2 MEG

R2 - WAS: 180K IS: 4.7 MEG

C1 - WAS: 39nF IS: 1μF NPE

C6 - NEW: 33pF (DIP MICA)

SAME VOLTAGE AND TOLERANCE AS BEFORE.

.560...7504 ACCELEROMETER PCB

INCREASE MTG HOLE & J4 & J3 HOLE TO .171 DIA., J5 TO .125 DIA.

MOVE C2 AWAY FROM L1

SPREAD PAD OF C2 & C3

INCREASE GROUND HOLE TO .083 DIA

MOVE C1 TO ALLOW FOR LARGER GROUND PAD

ENGINEERING CHANGE INITIATION

ACTUAL EFFECTIVITY DATE	STARTING SERIAL NUMBER

ECO APPROVAL J. Rowley 2/27/95 DISTRIBUTED FEB 27 1995

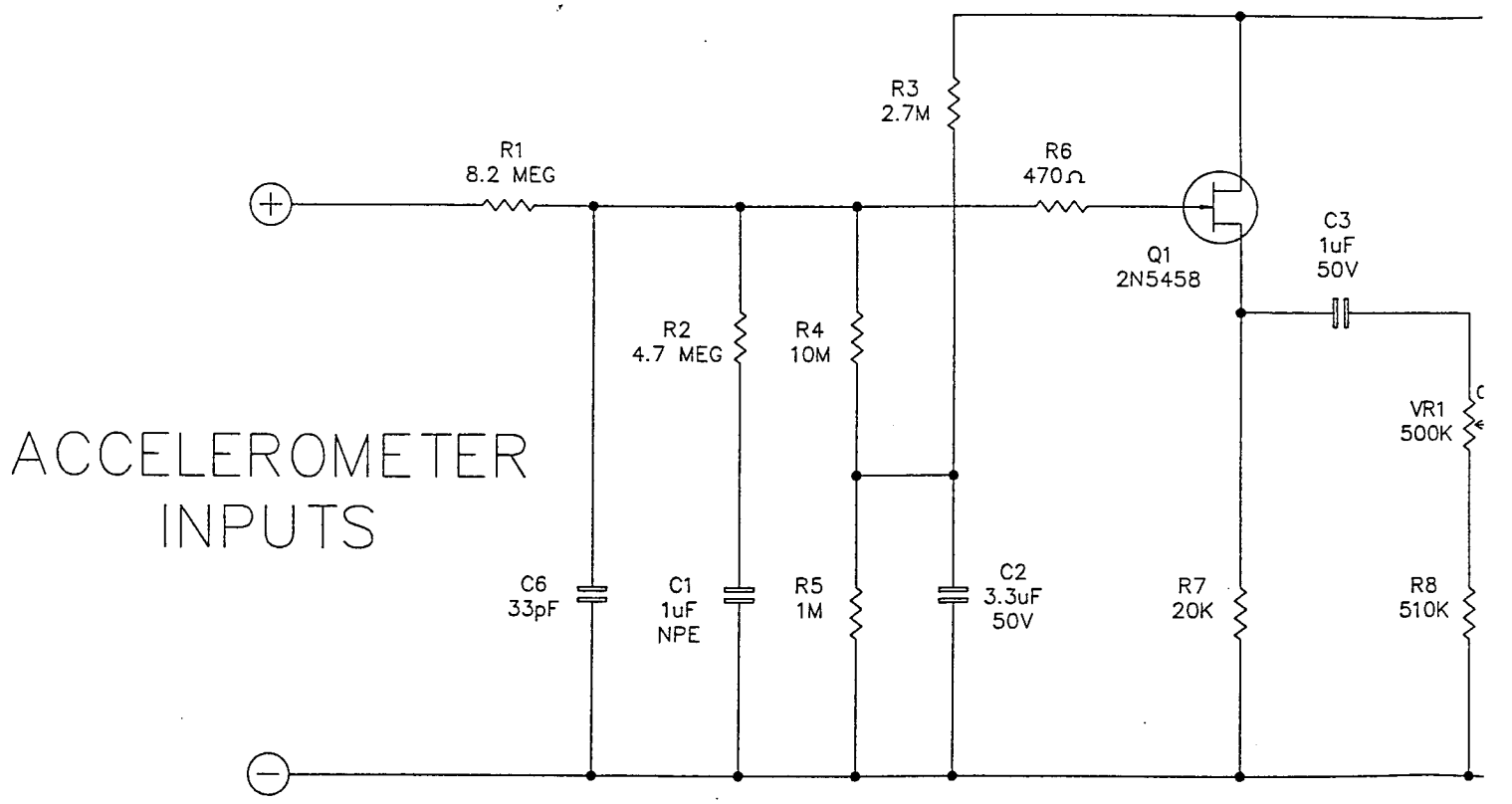
ACCELEROMETER
INPUTS
R1
8.2 MEG
R2
4.7 MEG
R3
2.7M
R4
10M
R5
1M
R6
470Ω
Q1
2N5458
C1
1uF
NPE
C2
3.3uF
50V
C3
1uF
50V
C6
33pF
R7
20K
VR1
500K
R8
510K

REVISIONS				
ECO	REV.	DESCRIPTION	DATE	APPROVED
–	A	RELEASE FOR PRODUCTION	01–06–95	RR JI
1343	B	ADD C6; CHG VALS ON R1, R2, C1	02–16–95	

INFINITY SYSTEMS, INC. PROPRIETARY

This document contains confidential and proprietary information that is the property of Infinity Systems, Inc. and may not be disclosed to or duplicated for others except as authorized by Infinity Systems, Inc.

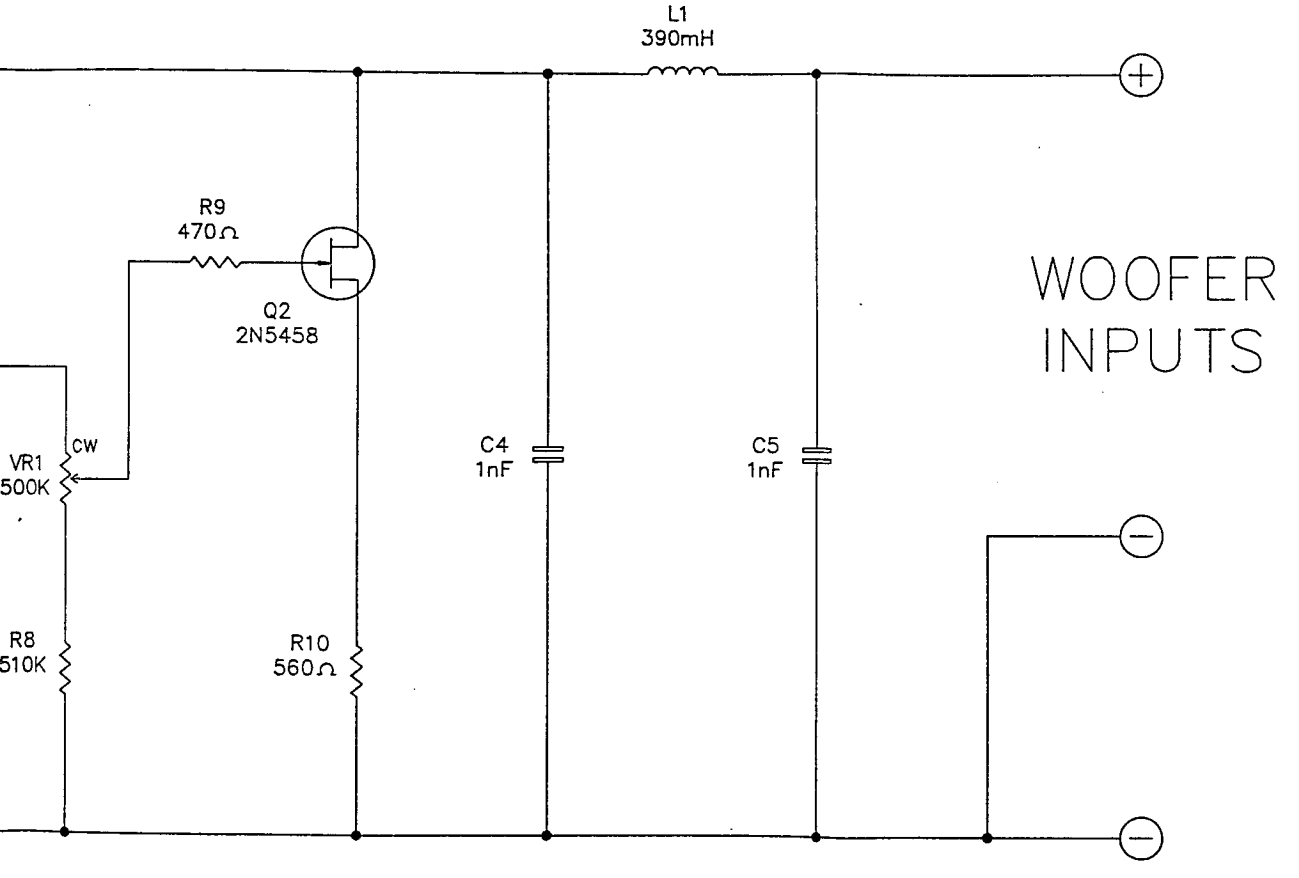

FEB 27 1995

Infinity	
EPSILON	
ACCELEROMETER BOARD	
P/N: .020...7507	
DWG NO: 020–7507–02178–49B	
DRAWN BY: R. RAHL	DATE 01–06–95
APPROVED: JM JI 01–12–95	
DO NOT SCALE DRAWING	SCALE N/A
CAD FILE NOT TO BE USED FOR CNC PROGRAM	
CAD FILE NAME: EPSILON/PIEZO/SCHEMB	
TOLERANCES: ANG: ± = .5° FRACT. ± = 1/32 DECIMALS: .XX ± = .01 .XXX ± = .005	
REVISION: B	SHEET 1 OF 1

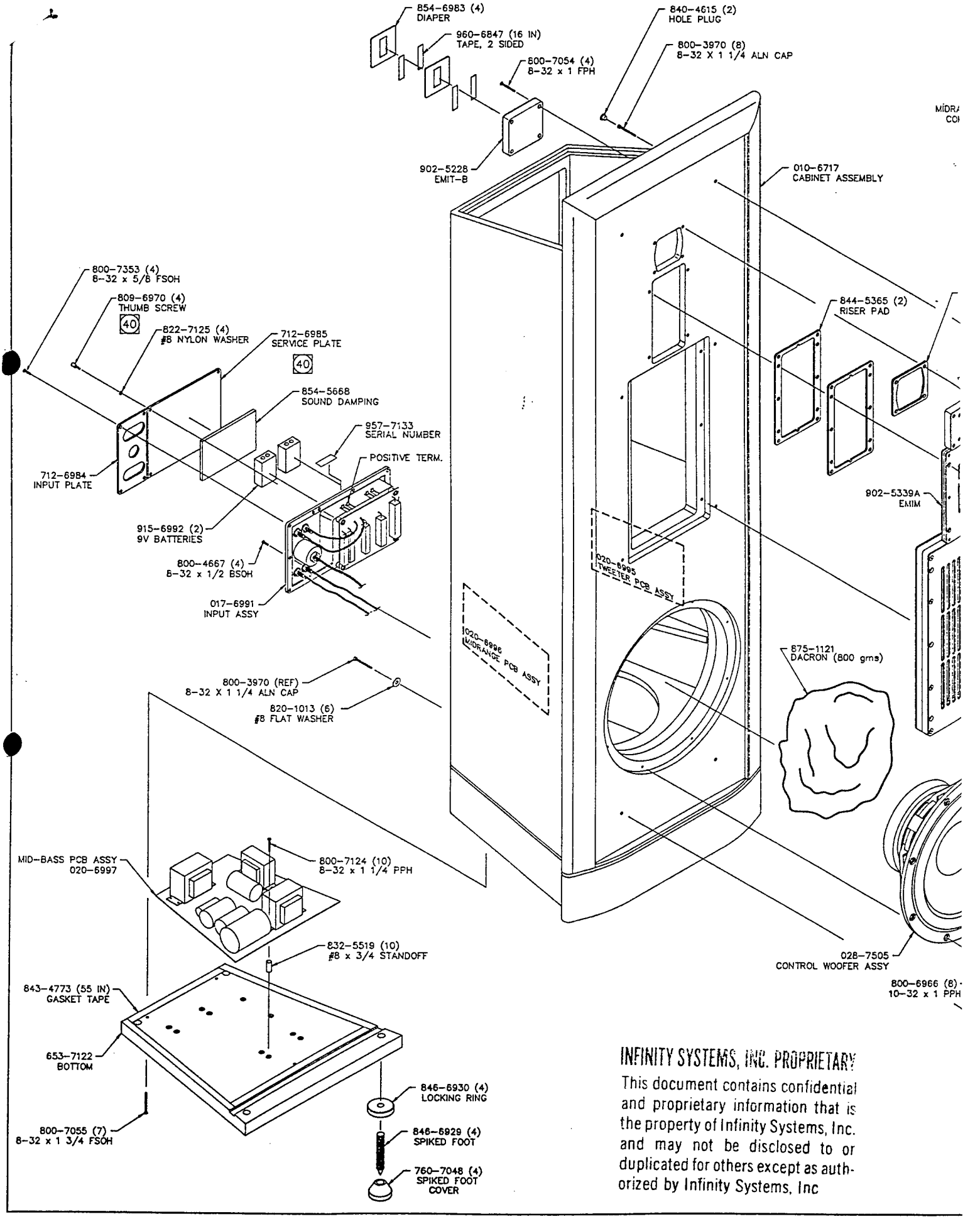

INFINITY SYSTEMS, INC. PROPRIETARY

This document contains confidential and proprietary information that is the property of Infinity Systems, Inc. and may not be disclosed to or duplicated for others except as authorized by Infinity Systems, Inc

REVISIONS				
ECO	REV.	DESCRIPTION	DATE	APPROVED
1341	A	RELEASED FOR PRODUCTION	02-23-95	

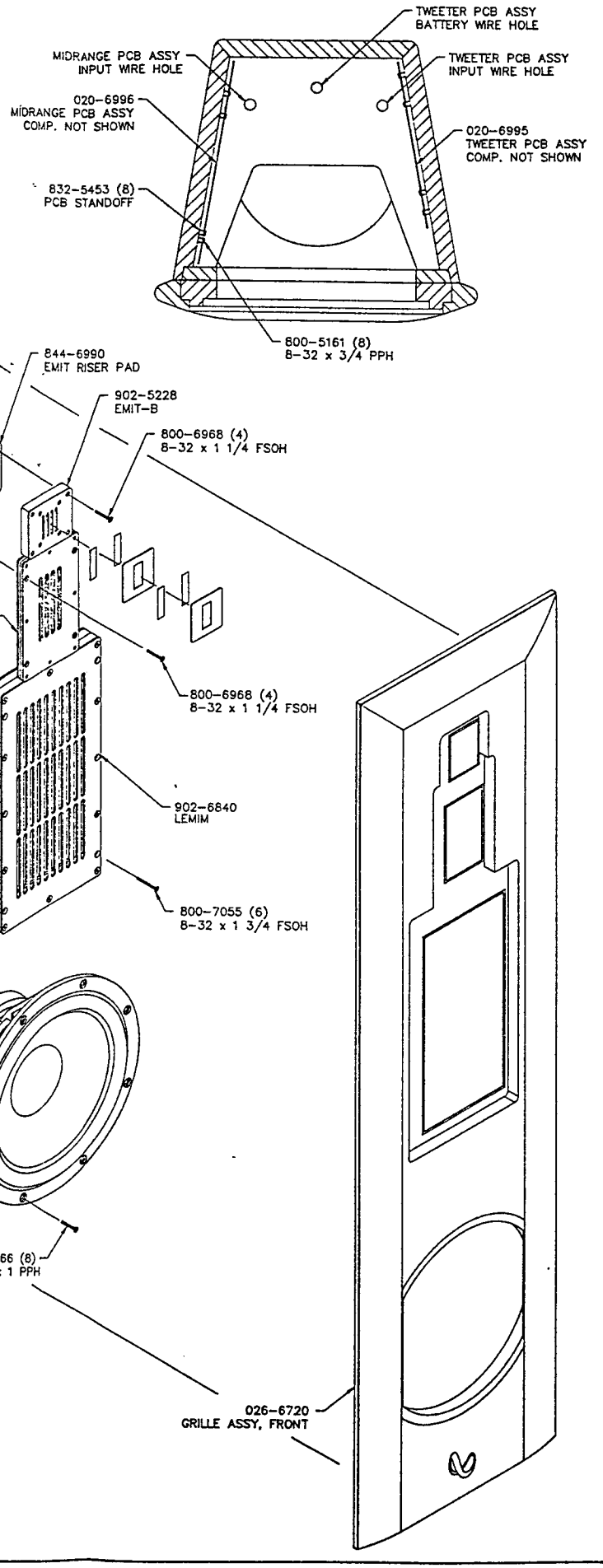

NOTES:

1. REMOVE (2) TEMPORARY SCREWS HOLDING PANEL (BETWEEN EMIM & LEMIM). REMOVE PANEL AND DISCARD SCREWS.
2. INSERT PCB STANDOFFS (832-5453) INTO PCB FROM THE BOTTOM SIDE OF TWEETER PCB ASSEMBLY (020-6995) AND TO MIDRANGE PCB ASSEMBLY (020-6996), 4 PLACES EACH.
3. AS INDICATED, INSTALL TWEETER PCB ASSEMBLY USING 8-32 x 3/4 PPH (800-5161), 4 PLACES. USE THREAD LOCK (855-7136) ON ALL MACHINE SCREWS, EXCEPT AS NOTED.
4. AS INDICATED, INSTALL MIDRANGE PCB ASSEMBLY USING 8-32 x 3/4 PPH (800-5161), 4 PLACES.
5. PLACE #5 x 3/4 STANDOFF (832-5519) IN EACH C'BORE ON BOTTOM (653-7122), 10 PLACES. INSTALL MID-BASS PCB ASSEMBLY (020-6997) TO THE BOTTOM USING 8-32 x 1 1/4 PPH (800-7124), 10 PLACES. APPLY GASKET TAPE (843-4773) TO TOP PERIMETER ON BOTTOM (55 IN). PLACE BOTTOM/PCB ASSEMBLY AT BOTTOM OF CABINET - DO NOT INSTALL.
6. SLIP BLUE AND GREEN MONSTER CABLE THRU A PC. OF FOAM TUBING (965-7172) FROM TWEETER PCB. SLIP 2 EA. BLACK AND RED BATTERY WIRES THRU A PC. OF FOAM TUBING FROM TWEETER PCB. SLIP WHITE & ORANGE MONSTER CABLE THRU A PC. OF FOAM TUBING FROM MIDRANGE PCB. WRAP THE LEADING END OF THE 3 PCS. OF FOAM AND LEAD EACH THRU THEIR RESPECTIVE HOLE IN THE MIDDLE BRACE (SEE DRAWING) AND OUT THE INPUT CUP HOLE. SOLDER EACH WIRE TO ITS MATING POSITION ON INPUT ASSEMBLY (017-6991) BOARD. ALL SOLDER CONNECTIONS USE ERSIN #SN63 (858-3097). HOTMELT (855-5751) BATTERY TERMINAL OPENINGS ON INPUT CUP.
7. LACE OUTPUT WIRES THROUGH SLOTS IN THE TOP OF THE CABINET ENCLOSURE, YEL, WHT AND BLU ON RIGHT AND BRN, ORG AND GRN ON THE LEFT. VIEWED FROM REAR (PG 2 OF 3).
8. MOUNT INPUT CUP ASSEMBLY USING 8-32 x 1/2 BSOH (800-4667), 4 PLACES. INSTALL (2) 9V BATTERIES (915-6992).
9. MOUNT INPUT PLATE (712-6984) USING 8-32 x 5/8 FSOH (800-7353), 4 PLACES.
10. MOUNT LEMIM USING 8-32 x 1 3/4 FSOH (800-7055), 6 PLACES.
11. PLACE HEATSHRINK (880-3453) OVER EACH WIRE AND SOLDER TO ITS MATING POSITION ON THE LEMIM (902-6840), YELLOW-POSITIVE, BROWN-NEGATIVE.
12. ADHERE TWO EMIM RISER PADS (844-5365) TO THE REAR OF THE EMIM (902-5339A). PLACE HEATSHRINK OVER EACH WIRE AND SOLDER TO ITS MATING POSITION ON THE EMIM, WHITE-POSITIVE, ORANGE-NEGATIVE.
13. MOUNT EMIM USING 8-32 x 1 1/4 FSOH (800-6968), 4 PLACES.
14. ADHERE EMIT RISER PAD (844-6990) TO THE REAR OF THE EMIT (902-5228). PLACE HEATSHRINK (880-3453) OVER POSITIVE WIRE (FROM XVR) AND SOLDER TO ITS MATING POSITION ON THE EMIT. BLUE-POSITIVE
15. STRIP AND TIN BOTH ENDS OF A 9" PIECE OF VIOLET MONSTER CABLE (603-3470).
16. PLACE HEATSHRINK OVER 9" WIRE AND SOLDER TO FRONT EMIT NEGATIVE TERMINAL.
17. MOUNT FRONT EMIT USING 8-32 x 1 1/4 FSOH (800-6968), 4 PLACES.
18. USING 2 SIDED TAPE (960-6847) ATTACH TWO DIAPERS (854-6983) TO EMIT FACE. ENSURE EMIT APERTURES ARE NOT COVERED BY TAPE.
19. SLIDE OTHER END OF 9" WIRE THROUGH THE RIGHT HOLE IN THE CABINET AND SLIDE GREEN NEGATIVE EMIT WIRE (FROM XVR) THROUGH THE LEFT HOLE IN THE CABINET (VIEWING FROM REAR OF CABINET). SEE WIRING DIAGRAM SH 2 OF 3.
20. PLACE HEATSHRINK OVER EACH WIRE AND SOLDER TO ITS MATING POSITION ON THE REAR EMIT. GREEN-POSITIVE, VIOLET-NEGATIVE.
21. MOUNT REAR EMIT USING 8-32 x 1 FSOH (800-7054), 1 PLACE.
22. USING AN X-ACTO KNIFE REMOVE 3/16" OF INSULATION FROM EACH OF THE REAR EMIT WIRES NEAR THE BOTTOM OF THE FRONT EMIT ROUTE (PG 2 OF 3).
23. SOLDER AN 8 OHM 5 W RESISTOR (140-0636) BETWEEN THE REAR EMIT WIRES.
24. HOTMELT RESISTOR TO THE BOTTOM OF THE EMIT ROUTE.
25. USING 2 SIDED TAPE (960-6847) ATTACH TWO DIAPERS (854-6983) TO EMIT FACE. ENSURE EMIT APERTURES ARE NOT COVERED BY TAPE.
26. MOUNT TY-WRAP MOUNTING BASE (861-7056), 2 PLACES, AS INDICATED, PULL WIRES TAUT AND MOUNT USING TY-WRAP (861-1499), 2 PLACES.
27. PULL ANY REMAINING WIRE SLACK INTO THE CABINET. SEAL WIRE SLOTS WITH HOTMELT.
28. LACE INPUT WIRES AND XLR WIRE FROM THE INPUT ASSEMBLY THROUGH THE WOOFER HOLE. PLACE HEATSHRINK OVER EACH WIRE AND SOLDER TO ITS MATING POSITION ON THE CONTROL WOOFER ASSEMBLY (028-7505). RED-POSITIVE, BLACK-NEGATIVE. SOLDER XLR WIRES AS INDICATED ON PAGE 2 OF 3, INSERT FROM COMPONENT SIDE.
29. EVENLY FILL CABINET ENCLOSURE WITH 800 GM. DACRON (875-1121).
30. MOUNT CONTROL WOOFER USING 10-32 x 1 PPH (800-6966), 8 PLACES.
31. ATTACH GRILLE ASSEMBLY (026-6720) TO FRONT OF CABINET WITH 8-32 x 1 1/4 ALN CAP SCREW (800-3970), 8 PLACES AND #8 FLAT WASHER (820-1013), 6 PLACES
32. COVER TOP TWO GRILLE SCREWS WITH HOLE PLUG (840-4615), 2 PLACES.
33. MOUNT BOTTOM USING 8-32 x 1 3/4 FSOH (800-7055), 7 PLACES.
34. INSTALL LOCKING RING (846-6930), SPIKED FOOT (846-6929) AND SPIKED FOOT COVER (760-7048) INTO BASE, 4 PLACES. ADJUST SPIKED FOOT SO CABINET IS LEVEL. TIGHTEN LOCKING RING AND FOOT COVER.
35. FROM FIBERGLASS KIT (876-7082) INSTALL FIBERGLASS, LEMIM LEFT/RIGHT (876-7080). PLACE FIBERGLASS, LEMIM CENTER (876-7081), BETWEEN LEFT AND RIGHT PIECES.
36. REINSTALL PANEL USING #8-1 PPH (801-3965), 4 PLACES.
37. FROM FIBERGLASS KIT INSTALL FIBERGLASS, EMIM (876-7083).
38. ATTACH REAR GRILLE ASSEMBLY (026-7085) TO REAR OF CABINET.
39. ATTACH TOP GRILLE ASSEMBLY (026-7086) TO TOP OF CABINET.
40. AFTER FINAL TEST, PLACE SERIAL NUMBER (957-7133) ON BOTTOM HORIZONTAL SURFACE OF INPUT CUP. ATTACH SOUND DAMPING (854-5668) TO CENTER OF REAR SURFACE OF SERVICE PLATE (712-6985). ATTACH SERVICE PLATE BY USING THUMB SCREW (809-9670) WITH #8 NYLON WASHER (822-7125), 4 PLACES. DO NOT USE THREAD LOCK ON THUMB SCREWS. ENSURE SERIAL NUMBER AND SERVICE PLATE HAVE MATCHING NUMBERS.

FEB 27 1995

Infinity Systems Inc	
EPSILON	
FINAL ASSEMBLY	
P/N: IF30003A	
DWG NO: IF30003A-02200-49B	
DRAWN BY: B. FRANK	
DATE: 02-23-95	SCALE: N/A
APPROVED: 2-23-95	
CAD FILE NAME: FNLASYA1	
TOLERANCES: ANG: ± = .5° FRACT. ± = 1/ DECIMALS: .XX ± = .01 .XXX ± = .005	
REVISION : A	SHEET 3 OF 3

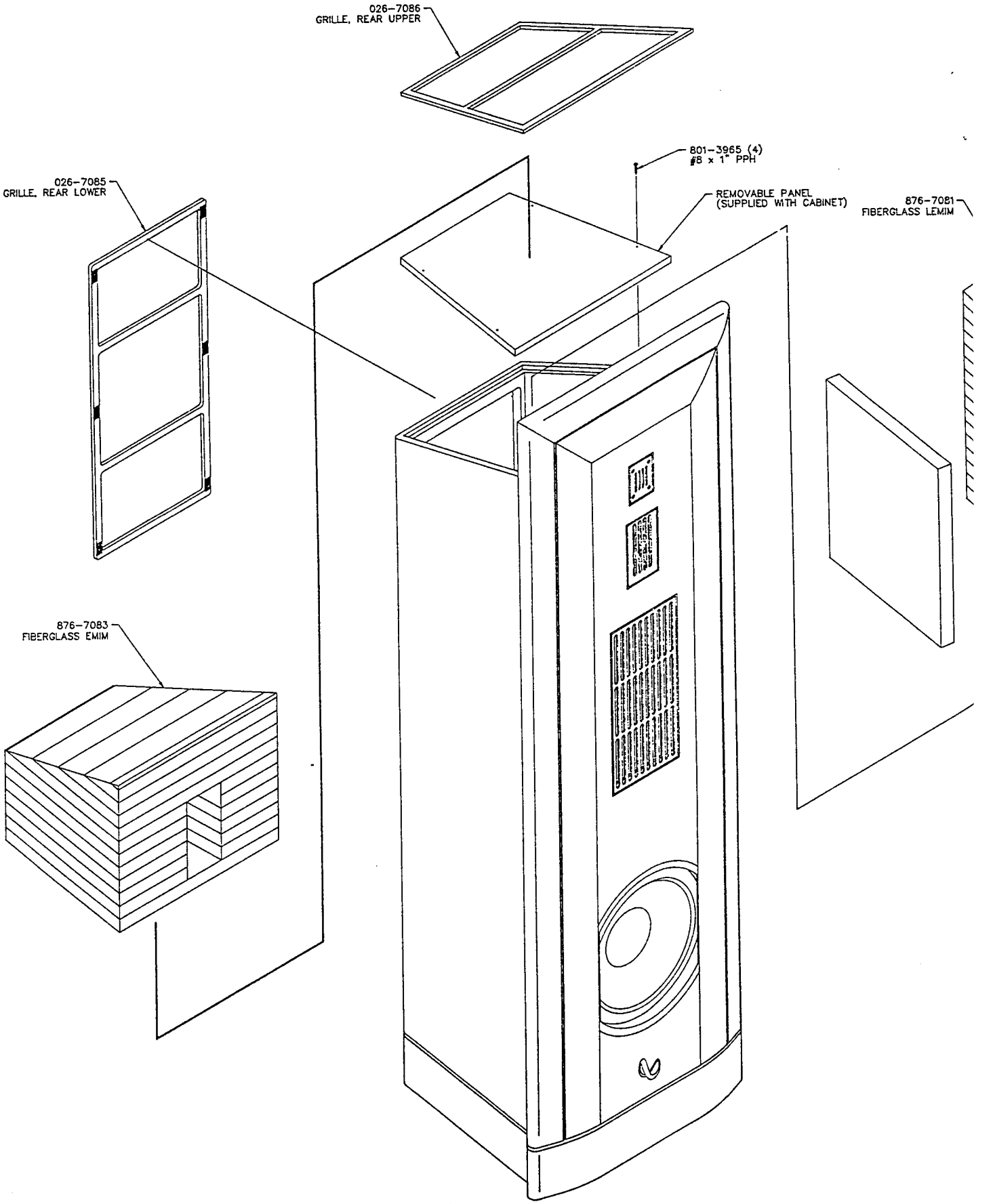

SEE NOTES 35 THRU 39 ON SHEET 1 OF 3

REVISIONS				
ECO	REV.	DESCRIPTION	DATE	APPROVED
		SEE PAGE 1 OF 3		

INFINITY SYSTEMS, INC. PROPRIETARY

This document contains confidential and proprietary information that is the property of Infinity Systems, Inc. and may not be disclosed to or duplicated for others except as authorized by Infinity Systems, Inc

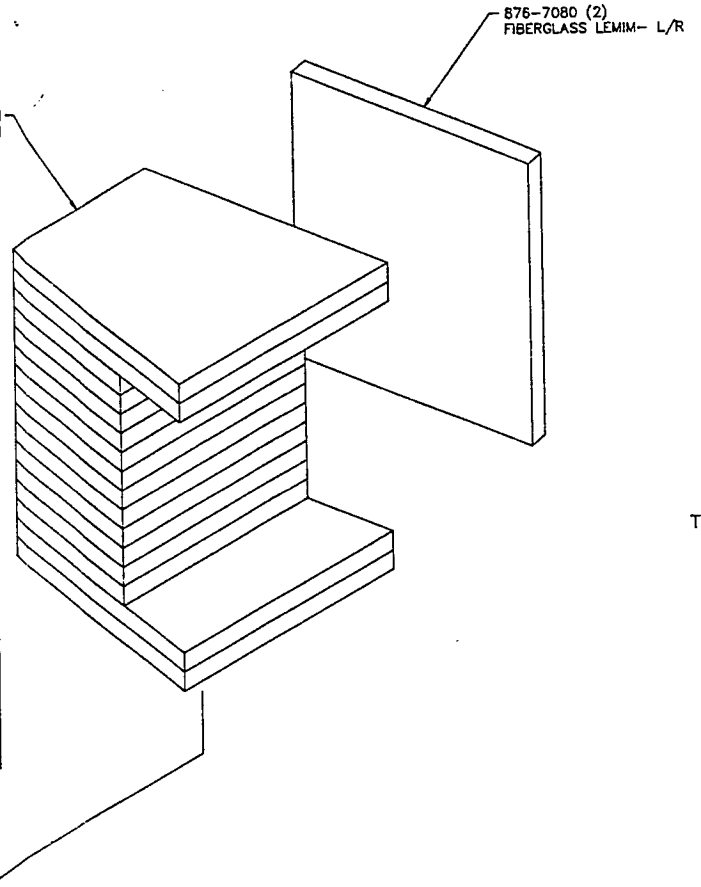

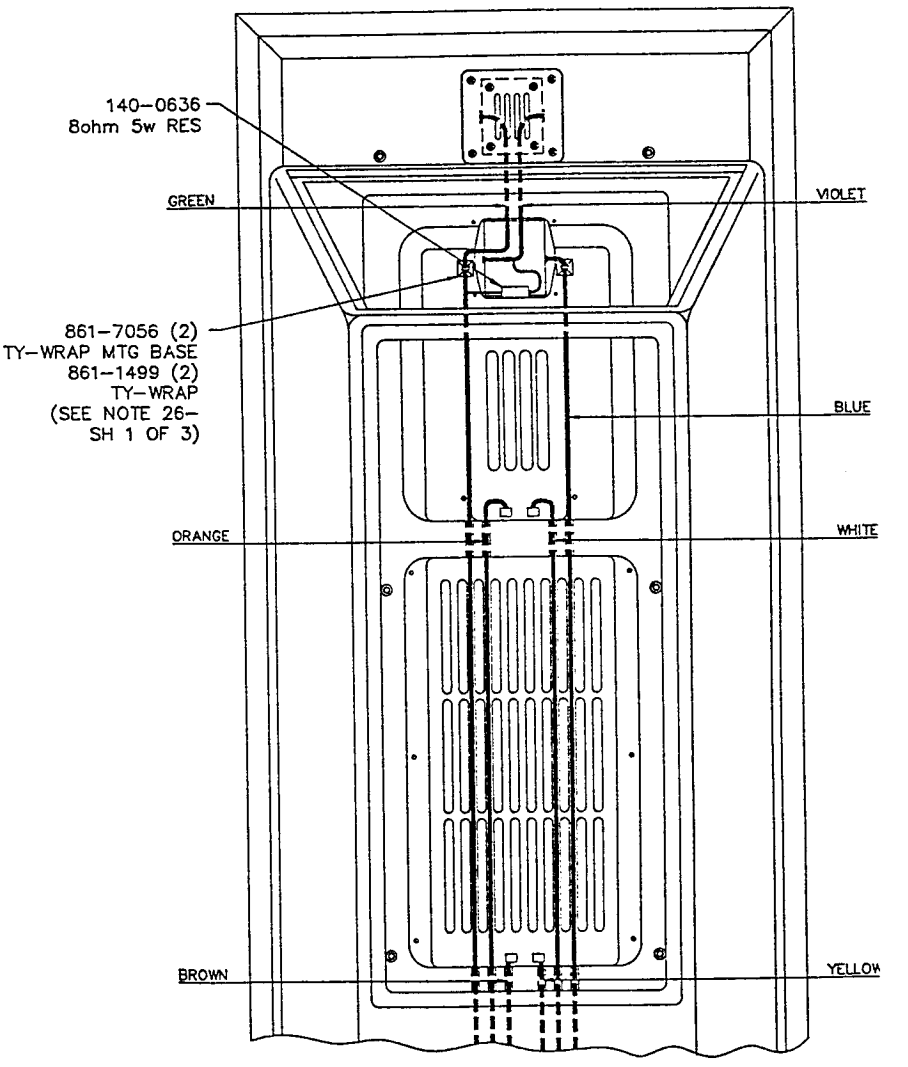

WIRING DIAGRAM

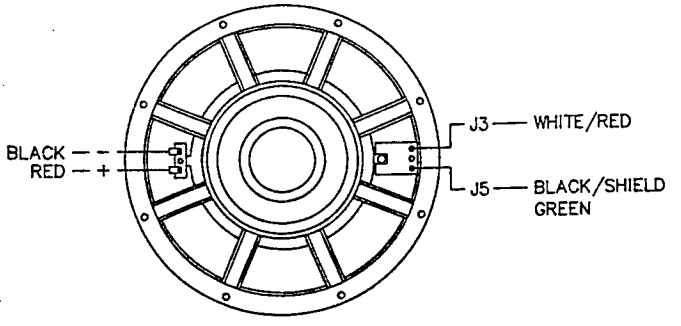

WOOFER WIRING DIAGRAM

FEB 27 1995

Infinity Systems In	
EPSILON	
FINAL ASSEMBLY	
P/N: IF30003A	
DWG NO: IF30003A-02200-49B	
DRAWN BY: B. FRANK	
DATE: 02-23-95	SCALE: N/A
APPROVED:	
CAD FILE NAME: FNLASYA2	
TOLERANCES: ANG: ± = .5° FRACT. ± = DECIMALS: .XX ± = .01 .XXX ± = .005	
REVISION : A	SHEET: 2 OF

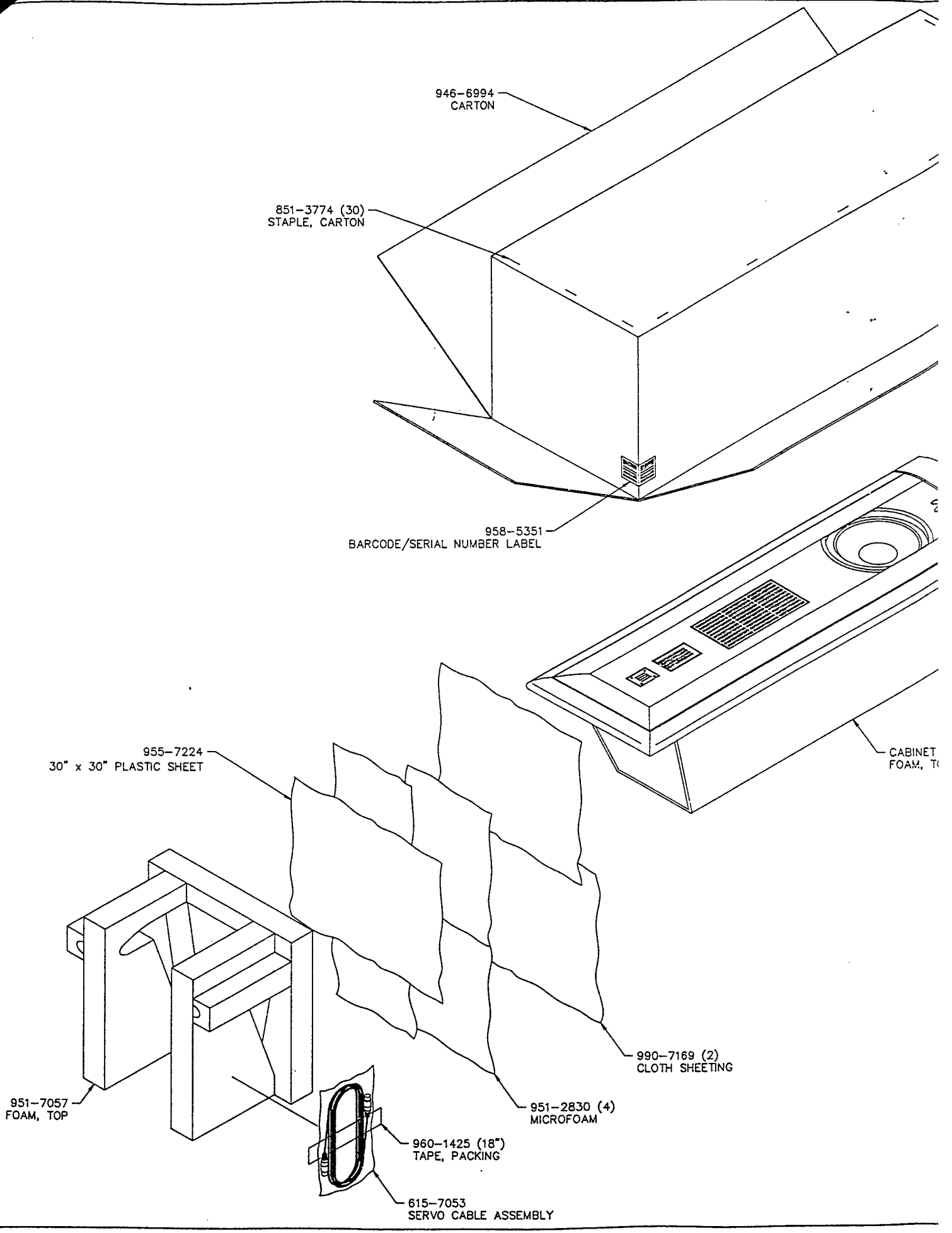
946-6994
CARTON
851-3774 (30)
STAPLE, CARTON
958-5351
BARCODE/SERIAL NUMBER LABEL
CABINET
FOAM, T
955-7224
30" x 30" PLASTIC SHEET
990-7169 (2)
CLOTH SHEETING
951-2830 (4)
MICROFOAM
951-7057
FOAM, TOP
960-1425 (18")
TAPE, PACKING
615-7053
SERVO CABLE ASSEMBLY

REVISIONS				
ECO	REV.	DESCRIPTION	DATE	APPROVED
		SEE PAGE 1 OF 3		

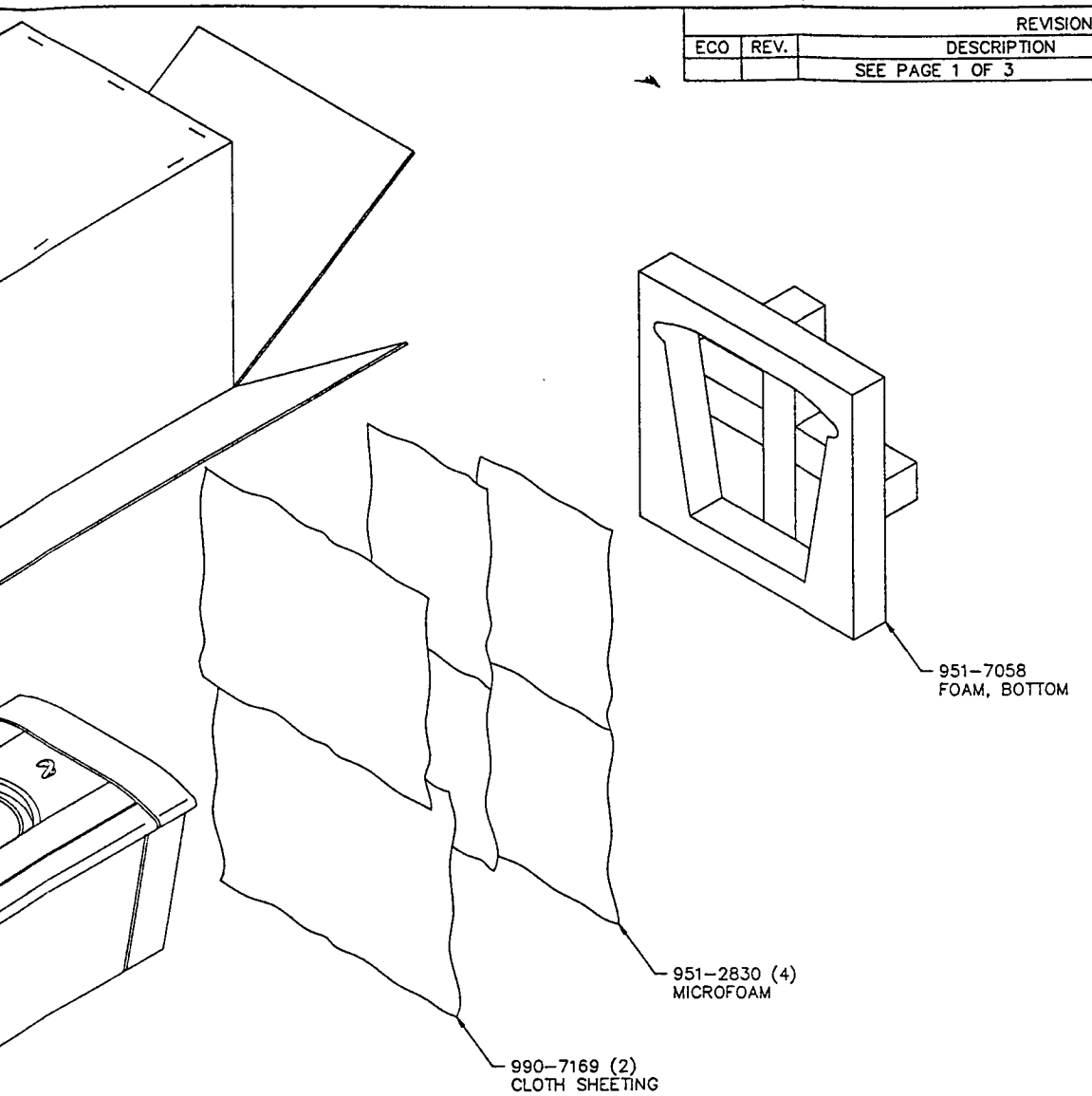

BINET ASSEMBLY
AM, TOP

FEB 27 1995

INFINITY SYSTEMS, INC. PROPRIETARY

This document contains confidential and proprietary information that is the property of Infinity Systems, Inc. and may not be disclosed to or duplicated for others except as authorized by Infinity Systems, Inc

NOTES:
1. LAY CABINET ON RAISED 3" HIGH CARPETED FIXTURE. USE CARE TO AVOID BINDING POSTS.
2. PLACE MICROFOAM SHEETING (951–2830) OVER BOTTOM FOAM (951–7058), 4 PLACES.
3. PLACE CLOTH SHEETING (990–7169) OVER MICROFOAM ON BOTTOM FOAM, 2 PLACES.
4. PLACE BOTTOM FOAM WITH SHEETING ON BOTTOM OF CABINET.
5. LAY CLOTH SHEETING OVER THE TOP OF THE CABINET, 2 PLACES.
6. LAY MICROFOAM OVER THE CLOTH SHEETING, 4 PLACES FOLLOWED BY PLASTIC SHEET (955–7224), 1 PLACE AS SHOWN.
7. SLIDE FOAM, TOP (951–7057) OVER TOP OF CABINET, ENSURE SHEETING REMAINS BETWEEN CABINET AND FOAM.
8. USING TAPE (960–1425) MOUNT SERVO CABLE ASSEMBLY (615–7053) TO SIDE OF TOP FOAM.
9. FOLD CARTON (946–6994) END FLAPS AND INNER SIDE FLAP AND STAPLE 4 PLACES. FOLD OUTER SIDE FLAP AND STAPLE 3 PLACES ALONG EACH SHORT EDGE AND STAPLE 5 PLACES ALONG THE LONG EDGE.
10. PLACE CARTON OVER CABINET/FOAM ASSEMBLY.
11. ROLL CARTON OVER ONTO ITS TOP.
12. FOLD CARTON BOTTOM AND REPEAT NOTE 10.
13. PLACE BARCODE/SERIAL NUMBER LABEL (958–5351) ON CARTON AS INDICATED.

Infinity Systems Inc.	
EPSILON	
FINAL ASSEMBLY	
P/N: IF30003A	
DWG NO: IF30003A–02200–49B	
DRAWN BY: B. FRANK	
DATE: 02–23–95	SCALE: N/A
APPROVED:	
CAD FILE NAME: FNLASYA3	
TOLERANCES: ANG: ± = .5° FRACT. ± = 1/32 DECIMALS: .XX ± = .01 .XXX ± = .005	
REVISION: A	SHEET 3 OF 3

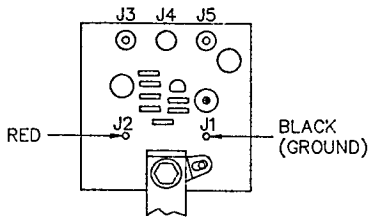

DETAIL A

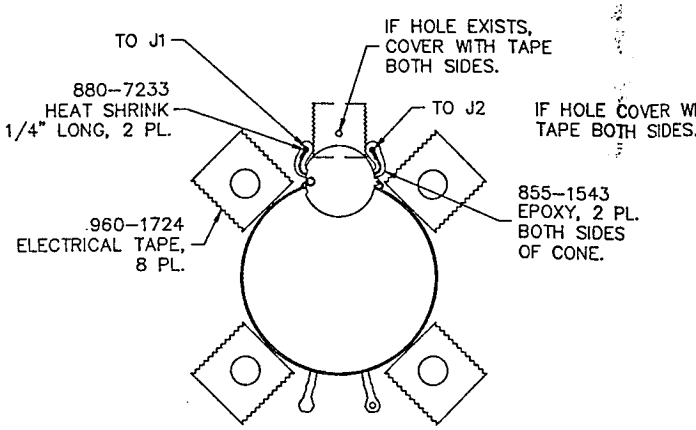

DETAIL C

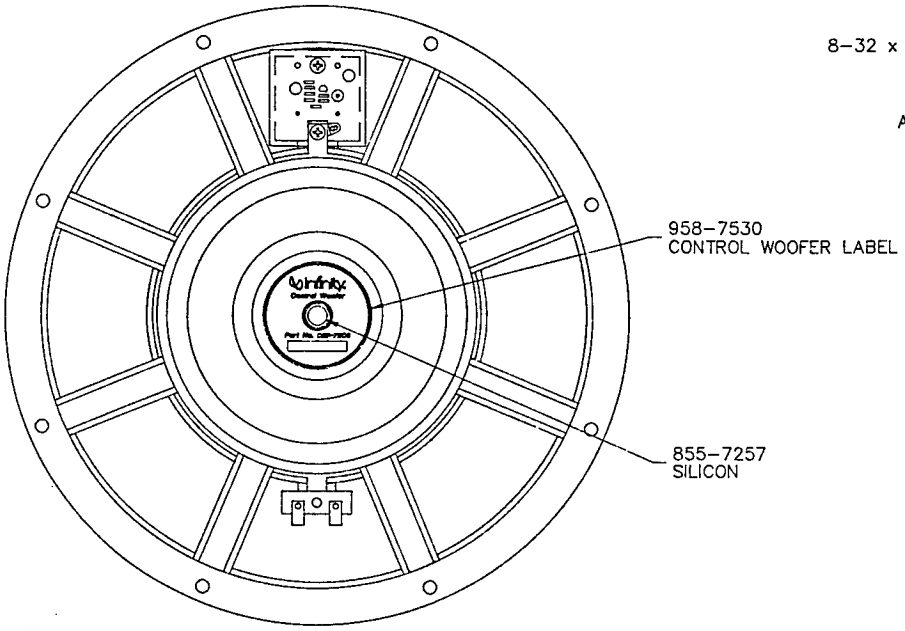

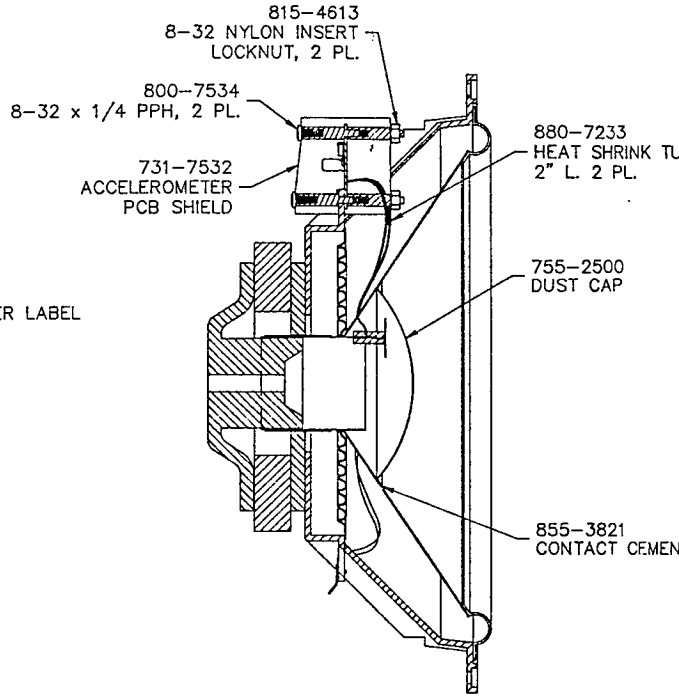

NOTES:

1. ALL SOLDER CONNECTIONS USE ERSIN #SN63 SOLDER (858-3097).
2. CLEAN BOTH SIDES OF THE CONE AROUND THE VENT HOLES WITH DENATURED ALCOHOL (857-3455).
3. CUT EIGHT 1" PIECES OF ELECTRICAL TAPE (960-1724).
4. COVER BOTH SIDES OF THE FOUR VENT HOLES WITH THE CUT PIECES OF ELECTRICAL TAPE. ENSURE THE TAPE IS WELL PRESSED TO THE CONE.
5. FROM THE REAR OF THE WOOFER, PLUG THE POLE PIECE VENT HOLE WITH SILICONE (855-7257). THE PLUG SHOULD BE ABOUT .75" THICK.
6. WITH THE MARKED SIDE FACING UP, ATTACH THE ACCELEROMETER (340-7253) TO THE FLAT END OF THE DOWEL ROD (755-7503) WITH EPOXY, AND SECURE LEADS TO THE DOWEL ROD BY USING EPOXY (SEE CROSS SECTION).
7. CUT 2 PIECES OF TINSEL LEAD (755-3995) 6" LONG AND SOLDER TO EACH ACCELEROMETER LEAD (SEE CROSS SECTION).
8. APPLY EPOXY (855-1543) TO BOTH SIDES OF FORMER AT THE CENTER BETWEEN THE WIRE HOLES IN THE CONE (SEE DETAIL C).
9. PLACE ACCELEROMETER MOUNTING POST ON VOICE COIL FORMER. ENSURE EPOXY DOES NOT RUN DOWN THE VOICE COIL.
10. SLIP 1/16 DIA x 1/4" L. 2 PCS. HEAT SHRINK (880-7233) OVER TINSEL LEADS TO COVER SOLDER JOINTS (SEE CROSS SECTION).
11. LACE TINSEL LEADS THROUGH WOOFER CONE (SEE DETAIL C), ENSURE SPLICE IN WIRE IS COVERED WITH HEAT SHRINK AND POSITIONED IN THE HOLES IN WOOFER CONE. EPOXY SPLICE TO CONE - BOTH SIDES OF CONE. IF THERE IS A THIRD HOLE (BETWEEN TINSEL LEAD HOLES) IT MUST ALSO HAVE (2) PIECES OF ELECTRICAL TAPE.
12. SCRAPE PAINT FROM WOOFER BASKET, MOUNT ACCELEROMETER PCB ASS'Y (020-7507) AND SOLDER LUG (818-5663) USING (2) 8-32 x 7/8 STANDOFFS (832-7533). APPLY THREAD LOCK ADHESIVE (855-7136) TO THE THREADS BEFORE TIGHTENING THE STANDOFFS. INSTALL 2 MORE STANDOFFS TO J4 (SEE DETAIL B).
13. SLIP 1/16 DIA x 2" L. 2 PCS. HEAT SHRINK OVER THE TINSEL LEAD TO PREVENT SHORTING WITH THE SHIELD (731-7532) STANDOFFS.
14. LACE TINSEL LEADS THROUGH MATING POSITION ON THE ACCELEROMETER PCB ASS'Y (SEE DETAIL A). LEAVE ENOUGH SLACK IN WIRE FOR FULL EXCURSION OF WOOFER CONE, LEADS MUST NOT TOUCH WOOFER CONE OR EACH OTHER. SOLDER WIRES TO ACCELEROMETER PCB ASS'Y. TRIM EXCESS WIRE.
15. INSTALL PCB SHIELD (731-7532) OVER THE PCB ASSEMBLY BY ALIGNING THE HOLES TO THE THREADS AND RECESS CUTOUTS TO THE TINSEL LEADS. SECURE WITH (2) 8-32 x 1/4 PPH SCREWS (800-7534) USING THREAD LOCK ADHESIVE AND (2) 8-32 NYLON INSERT LOCKNUTS (815-4613) (SEE SIDE VIEW).
16. INSTALL WOOFER DUSTCAP (755-2500) USING CONTACT CEMENT (855-3821). REMOVE EXCESS GLUE USING A COTTON SWAB AND DENATURED ALCOHOL.
17. REMOVE PAPER BACKING AND ATTACH CONTROL WOOFER LABEL (958-7530), AS SHOWN.

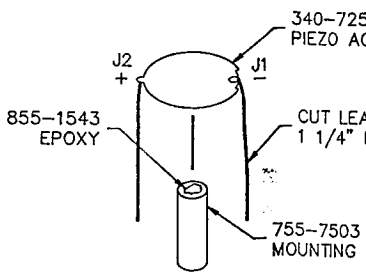

DETAIL D

SCALE: 1x

REVISIONS				
ECO	REV.	DESCRIPTION	DATE	APPROVED
1341	A	RELEASE FOR PRODUCTION	02-22-95	

COVER WITH
TH SIDES.

PL.
S

233
SHRINK TUBING
2 PL.

500
CAP

821
CT CEMENT

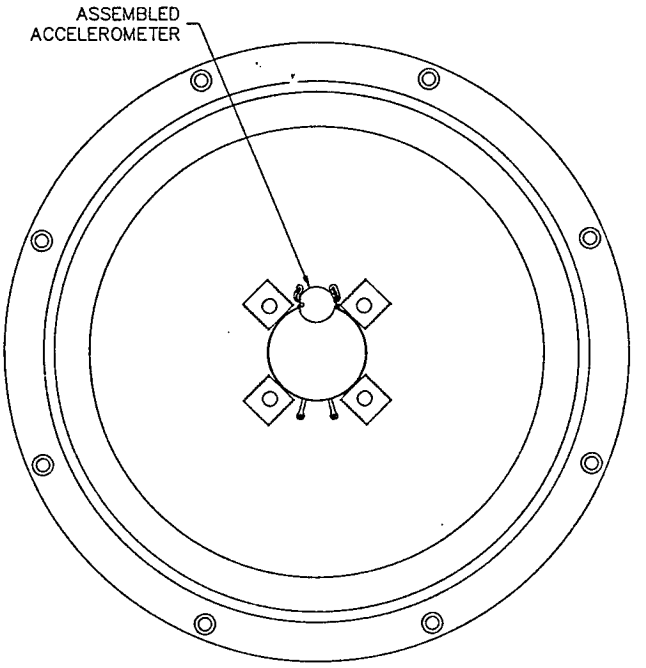

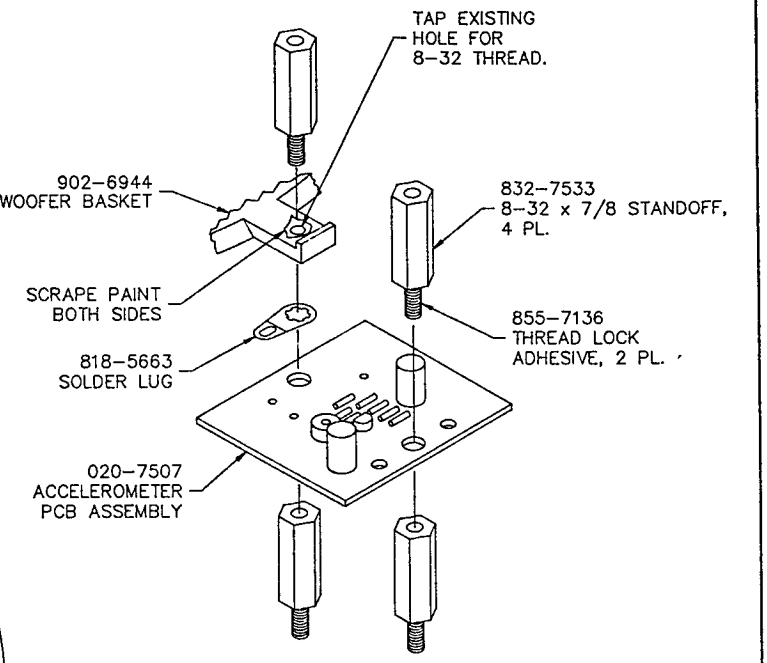

DETAIL B

INFINITY SYSTEMS, INC. PROPRIETARY
This document contains confidentia
and proprietary information that is
the property of Infinity Systems, Inc.
and may not be disclosed to or
duplicated for others except as auth
orized by Infinity Systems, Inc

MAR 0 8 1995

340-7253
PIEZO ACCELEROMETER

CUT LEADS TO
1 1/4" LONG, 2 PL.

755-7503
MOUNTING POST

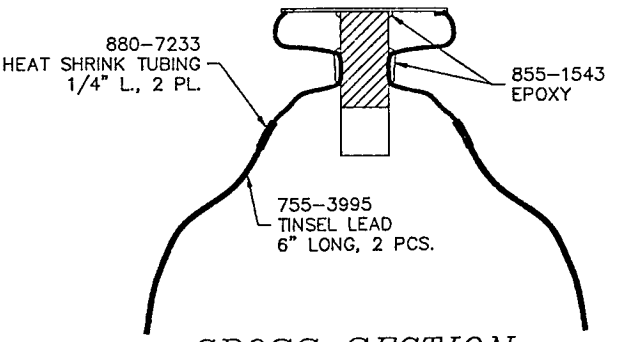

CROSS SECTION
SCALE: 2x

Infinity Systems Inc.	
EPSILON	
CONTROL WOOFER ASSEMBLY	
P/N: 028-7505	
DWG NO: 028-7505-02176-49B	
DRAWN BY: S. CHA	
DATE: 01-05-95	SCALE: 1/2
APPROVED:	2-23-95
CAD FILE NAME: WFRASSYE	
TOLERANCES: ANG: ± = .5° FRACT. ± = 1/32 DECIMALS: .XX ± = .01 .XXX ± = .005	
REVISION: A	

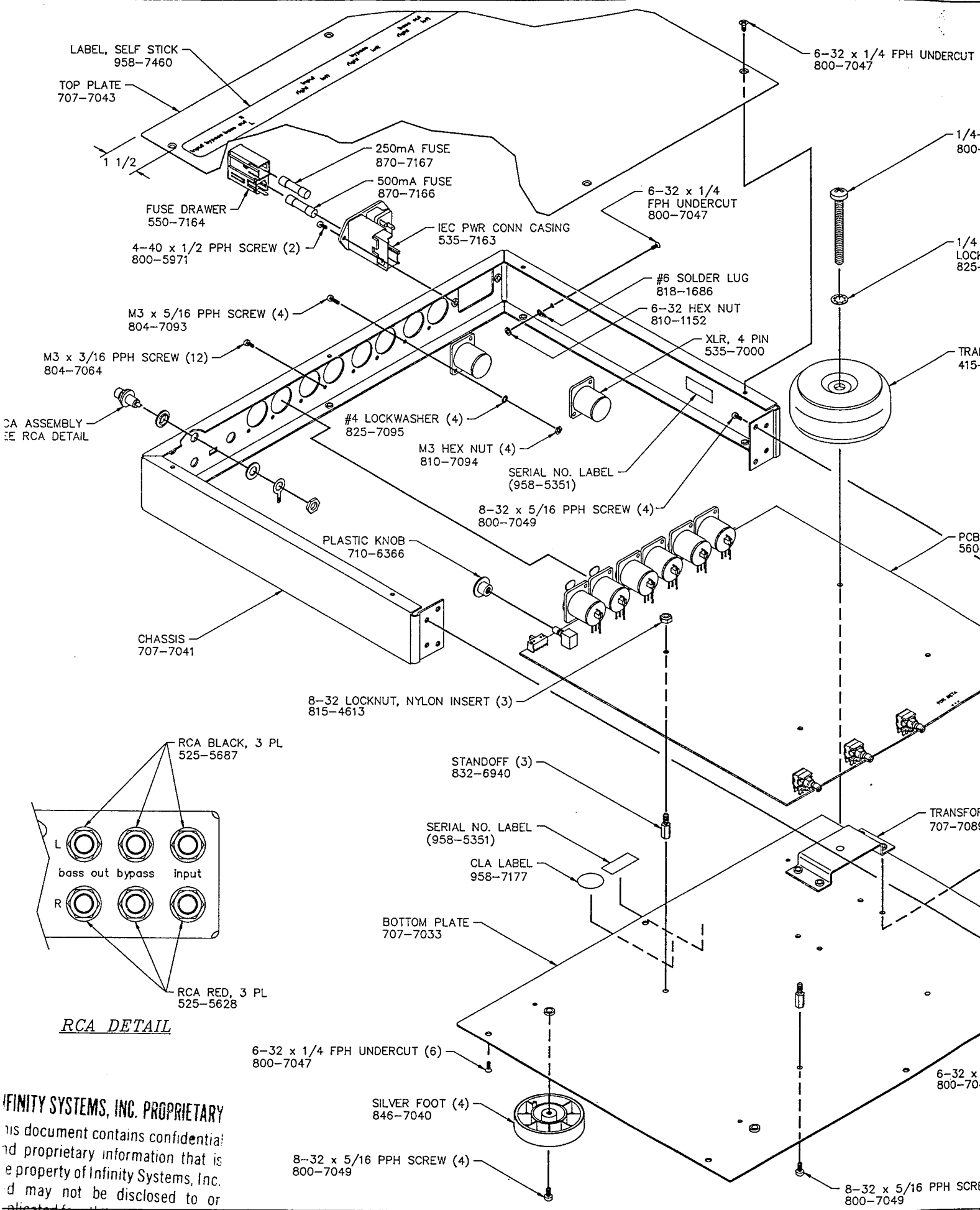

RCA DETAIL

FINITY SYSTEMS, INC. PROPRIETARY

his document contains confidential
nd proprietary information that is
e property of Infinity Systems, Inc.
d may not be disclosed to or
plicated for others except as auth
zed by Infinity Systems, Inc

REVISIONS				
ECO	REV.	DESCRIPTION	DATE	APPROVED
	A	RELEASED FOR PRODUCTION	02-22-95	

NOTES:

1. ATTACH SIX RCA'S (RED 525-5628, BLACK 525-5687) TO CHASSIS (707-7041) AS SHOWN. SEE RCA DETAIL.
2. ATTACH IEC POWER CONNECTOR (539-7163) TO CHASSIS WITH TWO #4-40 x 1/2 SCREWS (800-5971). INSTALL 500mA FUSE (870-7166) INTO VOLTAGE SELECTOR IN THE FUSE DRAWER (550-7164), AND THE 250mA FUSE (870-7167) IN SPARE SECTION OF FUSE DRAWER AND INSTALL IN IEC POWER CONNECTOR WITH "120" SHOWING THRU THE WINDOW.
3. ATTACH FOUR PIN XLR'S (535-7000) TO CHASSIS WITH FOUR M3 x 5/16 PPH (804-7093), FOUR #4 INTERNAL LOCKWASHERS (825-7095), AND FOUR M3 HEX NUTS (810-7094).
4. PLACE PLASTIC KNOB (710-6366) ON SPLINE AS SHOWN.
5. PLACE CHASSIS ON A HARD SURFACE. SLIDE PCB ASSEMBLY (560-7554) INTO CHASSIS ANGLING TO PLACE FEMALE XLR TAB TO OUTSIDE OF CHASSIS.
6. ATTACH THREE PIN XLR'S TO CHASSIS WITH TWELVE M3 x 3/16 PPH (804-7064).
7. ATTACH FRONT PLATE (707-7036) WITH FOUR 6-32 x 1/4 FPH UNDERCUT (800-7047) TO CHASSIS AS SHOWN. ATTACH FRONT PLATE TO POTS AND POWER SWITCH (503-7108) WITH NUTS AND WASHERS, AS SHOWN. ROTATE POTS TO FULL COUNTER CLOCKWISE (CCW) POSITION.
8. ATTACH FOUR FEET (846-7040) TO BOTTOM PLATE (707-7033) WITH FOUR 8-32 x 5/16 PPH (800-7049).
9. ATTACH THREE 8-32 x 1/2 MALE/FEMALE STANDOFFS (832-6940) WITH THREE 8-32 x 5/16 PPH (800-7049).
10. SCREW TRANSFORMER BRACKET TO BOTTOM PLATE WITH FOUR 6-32 x 1/4 FPH SCREWS (800-7047).
11. ATTACH BOTTOM PLATE (707-7033) TO CHASSIS WITH SIX 6-32 x 1/4 FPH SCREWS (800-7047).
12. PLACE SERIAL NO. LABEL (958-5351) AND A CLA LABEL (958-7177) ON BOTTOM PLATE NEXT TO SILKSCREEN AND A SECOND SERIAL NO. LABEL INSIDE THE CHASSIS, LOCATION VENDOR OPTION.
13. ATTACH TRANSFORMER (415-7090) TO PCB WITH 1/4-20 x 1 1/2 TPH (800-7126) AND 1/4" INTERNAL LOCKWASHER (825-2412).
14. SEE SHEET 2 OF 3 FOR HARD WIRE DIRECTIONS.
15. ATTACH #6 SOLDER LUG (818-1686) TO CHASSIS WITH 6-32 x 1/4 FPH UNDERCUT (800-7047) AND 6-32 HEX NUT (810-1152) AS SHOWN.
16. ROTATE POT SHAFT TO STANDBY POSITION. PLACE KNOB (710-7077) ON POWER SWITCH SHAFT SET INDICATOR TO STANDBY AND TIGHTEN WITH SETSCREWS (2).
17. TIGHTEN BOARD TO BOTTOM PLATE WITH THREE 8-32 NYLON INSERT LOCKNUTS (815-4613) TO TOP OF MALE/FEMALE STANDOFFS.
18. PLACE TWO LED'S (311-7062) INTO HOLES IN FACE PLATE (705-7046), AND HOT GLUE INTO PLACE FROM INSIDE.
19. ATTACH FACE PLATE (705-7046) TO FRONT PLATE WITH FOUR 8-32 x 5/16 PPH SCREWS (800-7049) FROM INSIDE, AS SHOWN.
20. PLACE THREE KNOBS (710-6976) ON POT SHAFT WITH INDICATOR FACING FAR LEFT (CCW) INDICATOR.
21. ATTACH TOP PLATE (707-7043) TO CHASSIS WITH SIX 6-32 x 1/4 FPH SCREWS (800-7047).
22. ATTACH SELF STICK LABEL (958-7460) TO TOP PLATE CENTERED SIDE TO SIDE AND 1 1/2" FROM BACK EDGE.

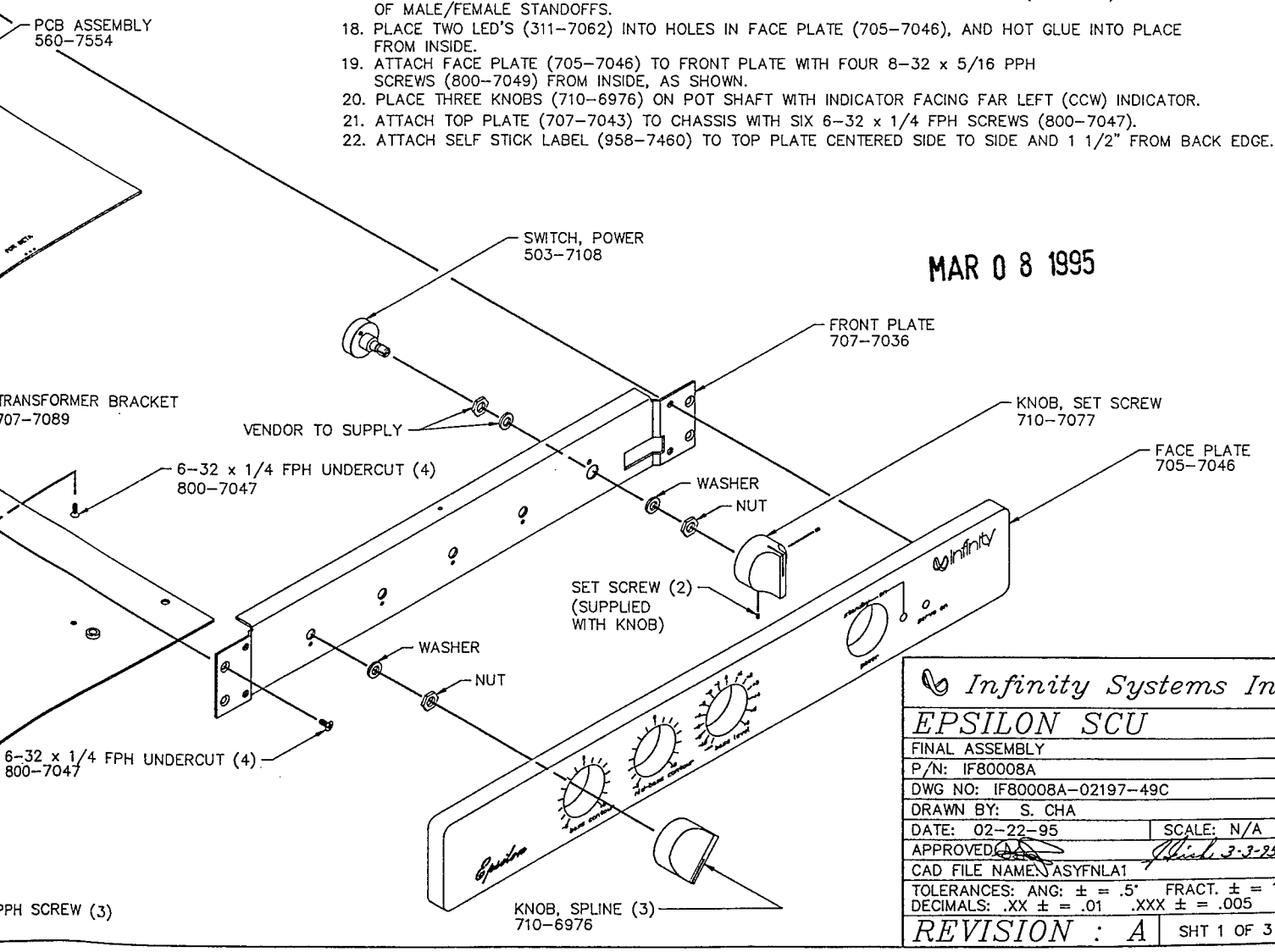

MAR 0 8 1995

Infinity Systems Inc.	
EPSILON SCU	
FINAL ASSEMBLY	
P/N: IF80008A	
DWG NO: IF80008A-02197-49C	
DRAWN BY: S. CHA	
DATE: 02-22-95	SCALE: N/A
APPROVED:	3-3-95
CAD FILE NAME: ASYFNLA1	
TOLERANCES: ANG: ± = .5° FRACT. ± = 1/32 DECIMALS: .XX ± = .01 .XXX ± = .005	
REVISION : A	SHT 1 OF 3

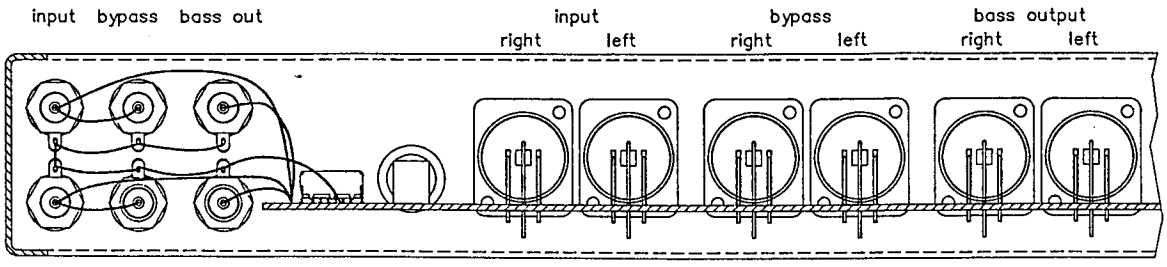

DETAIL A

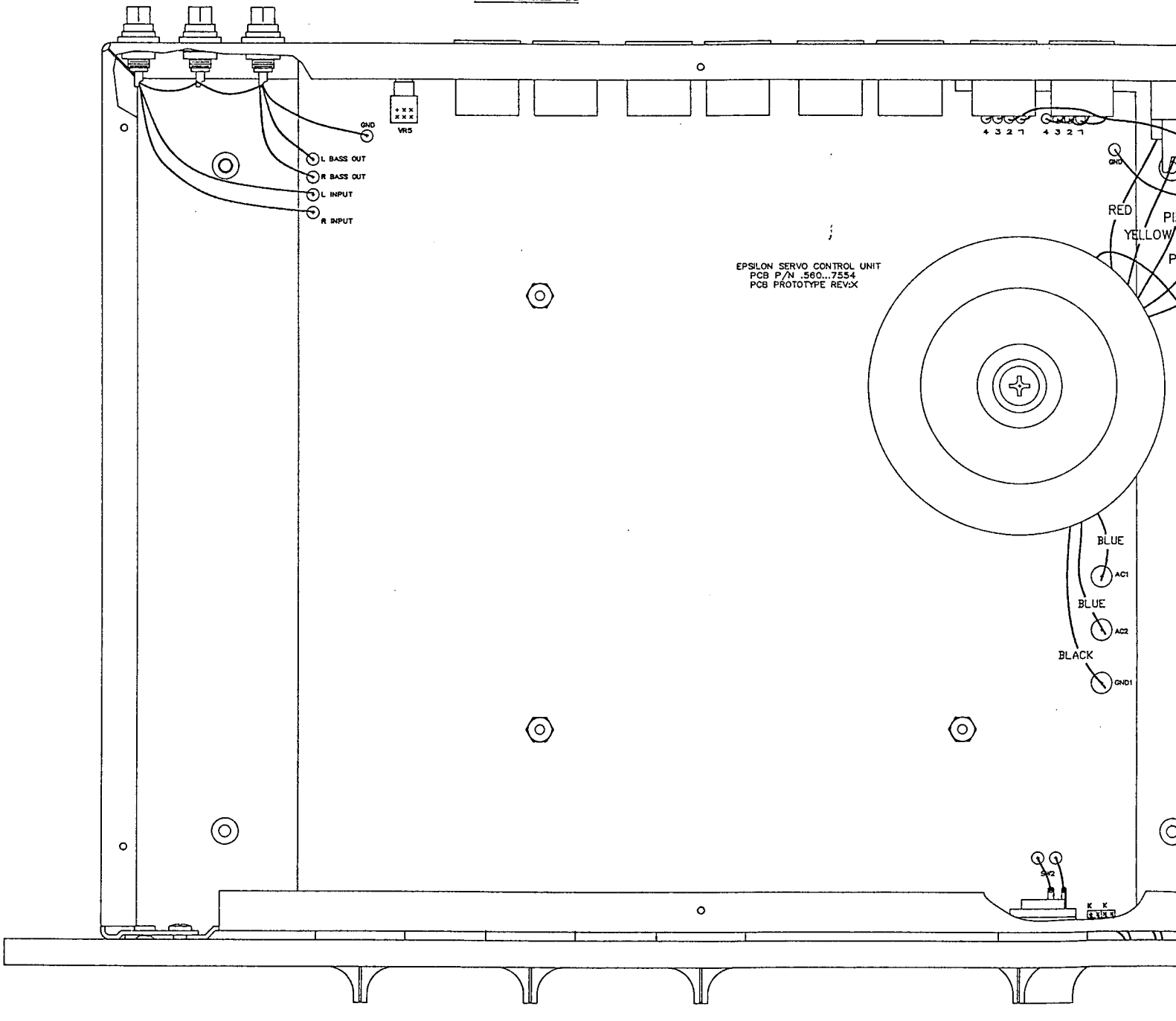

DETAIL D

NOTES:

1. DETAIL A – GROUND RCA'S TOGETHER AND THEN TO BOARD USING LUGS ON RCA'S. WIRE RCA BYPASS "L" TO RCA INPUT "L" AND RCA BYPASS "R" TO RCA IN
2. DETAIL B – WIRE 4 PIN XLR'S TO BOARD, ONE TO ONE, TWO TO TWO, ETC. WIRE CONNECTOR TO TRANSFORMER. WIRE BOARD GROUND TO #6 SOLDER LUG (818 GROUND TO CHASSIS). ATTACH GREEN XFMR SHIELD WIRE TO SOLDER LUG. PLACE A SECOND WIRE FROM THE SOLDER LUG TO THE LUG ON THE FO
3. DETAIL C – SOLDER (2) LED CONNECTOR ASSY'S TO PCB. THREAD LED LEADS THROUGH FRONT PLATE AND ATTACH FACE PLATE TO FRONT PLATE (LED'S ATTACH SHORT LEAD CATHODE ON LED CONNECTS TO BLACK WIRE. SOLDER SWITCH LEADS TO THE BOARD.
4. SOLDER ALL CONNECTIONS.

INFINITY SYSTEMS, INC. PROPRIETARY

This document contains confidential and proprietary information that is the property of Infinity Systems, Inc. and may not be disclosed to or duplicated for others except as authorized by Infinity Systems, Inc.

REVISIONS				
ECO	REV.	DESCRIPTION	DATE	APPROVED
–	–	SEE SHEET 1 OF 3	–	

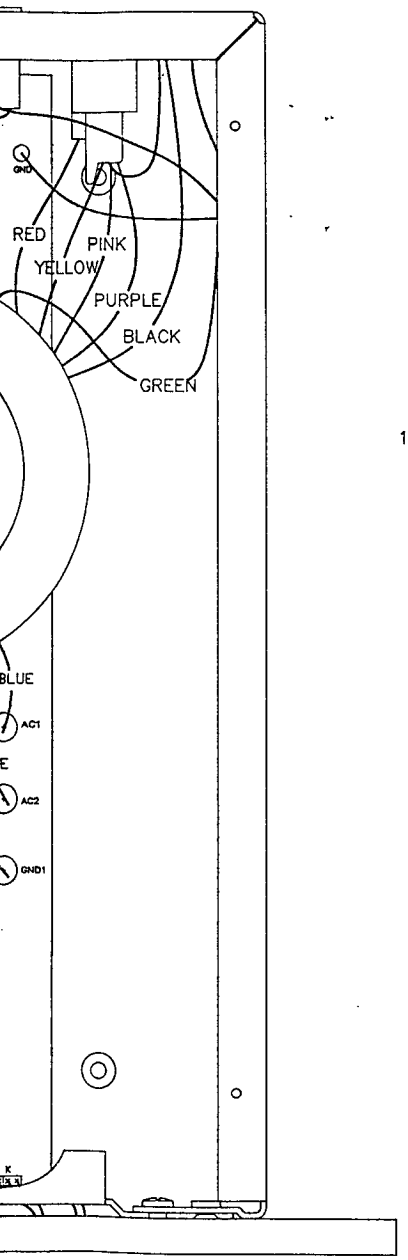

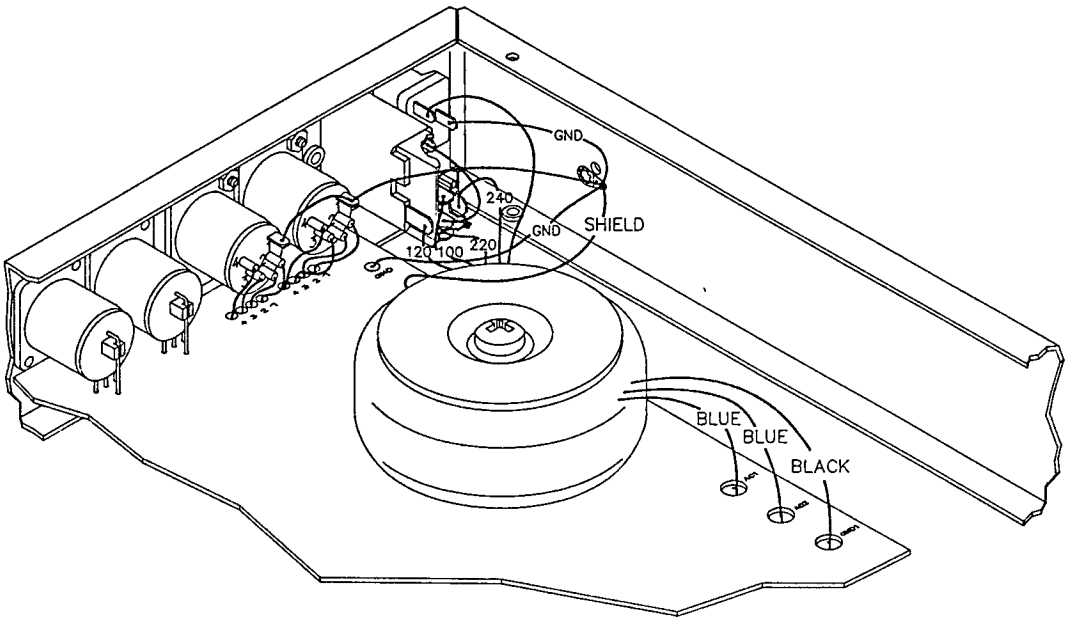

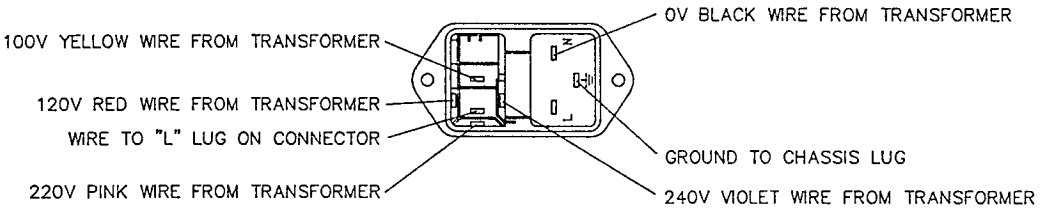

DETAIL B

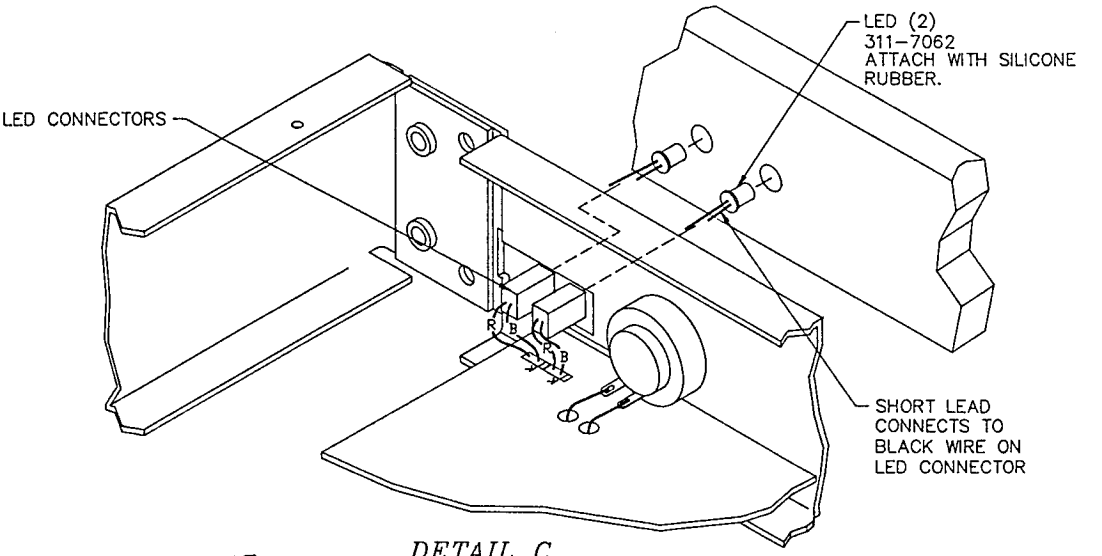

DETAIL C

B=BLACK
R=RED

MAR 0 8 1995

TO RCA INPUT "R". WIRE BYPASS AND BASS OUT TO RESPECTIVE XLR PCB HOLE. SEE DETAIL D.
R LUG (818–1686) AND CONNECTOR GROUND TO SOLDER LUG (BE SURE TO LEAVE ENOUGH WIRE TO
ON THE FOUR PIN XLRS CONNECTING THE XLRS IN THE PROCESS.
D'S ATTACH TO FACE PLATE WITH SILICONE RUBBER). ATTACH LED CONNECTORS TO LED LEADS,

Infinity Systems Inc.	
EPSILON SCU	
FINAL ASSEMBLY	
P/N: IF80008A	
DWG NO: IF80008A–02197–49C	
DRAWN BY: S. CHA	
DATE: 02–22–95	SCALE: N/A
APPROVED:	
CAD FILE NAME: ASYFNLA1	
TOLERANCES: ANG: ± = .5° FRACT. ± = 1/32 DECIMALS: .XX ± = .01 .XXX ± = .005	
REVISION : A	SHT 2 OF 3

Infinity

SERVO CONTROL UNIT PCB MODIFIC

1. REMOVE
LC1 AND RC1

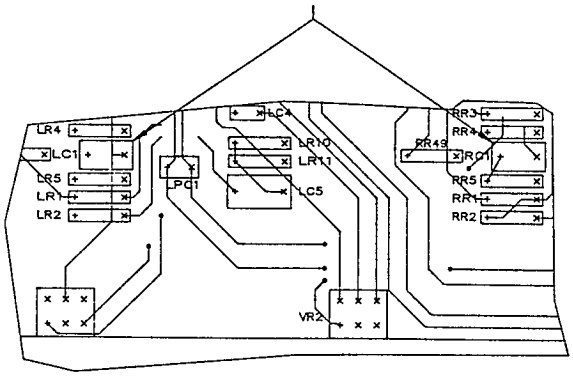

2. REMOVE AND ROTATE LC2 AND RC2 AS SHOWN
SOLDER WIRE TO EXPOSED LEG OF LC2 AND RC2

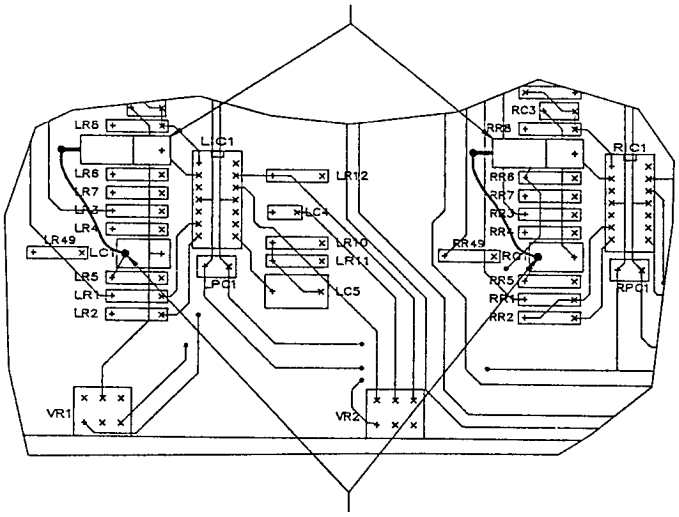

SOLDER WIRE INTO LEFT PAD OF LC1 AND RC1

3. REMOVE LC22 AND RC22

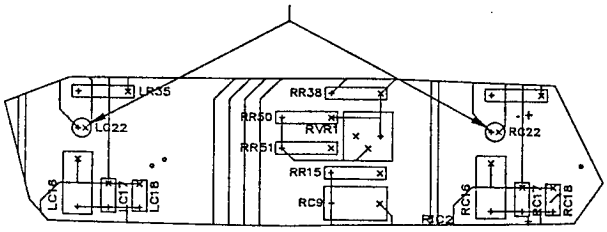

REPLACE LC22 AND RC22 WITH 1uF CAPACITOR

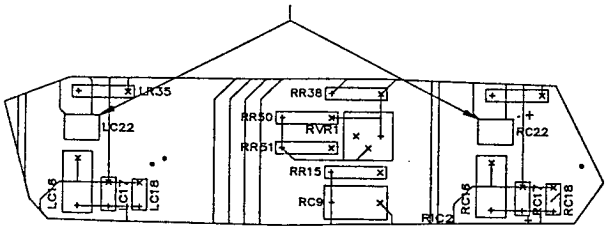

4.

5.

6.

7.

finity

ODIFICATIONS – PAGE 1 OF 2

REMOVE LR47 AND RR47
REPLACE LR47 AND RR47 WITH 22.1K OHM RESISTOR

REMOVE LR48 AND RR48
REPLACE LR48 AND RR48 WITH 750 OHM RESISTOR ON RIGHT SIDE HOLE
LEAVE RESISTOR STANDING ON ONE SIDE AS SHOWN

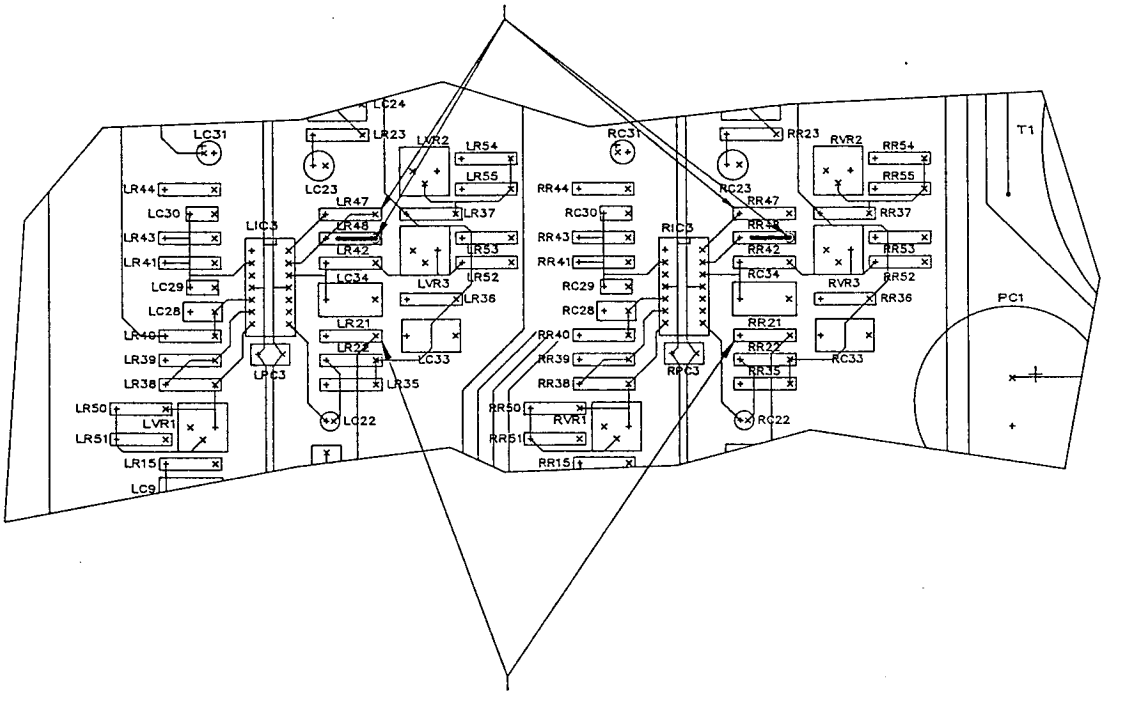

REMOVE LR21 AND RR21 AND REPLACE WITH 20K OHM RESISTOR

SOLDER LEG OF 22uF NPE CAPACITOR TO LIFTED LEG OF LR48 AND RR48

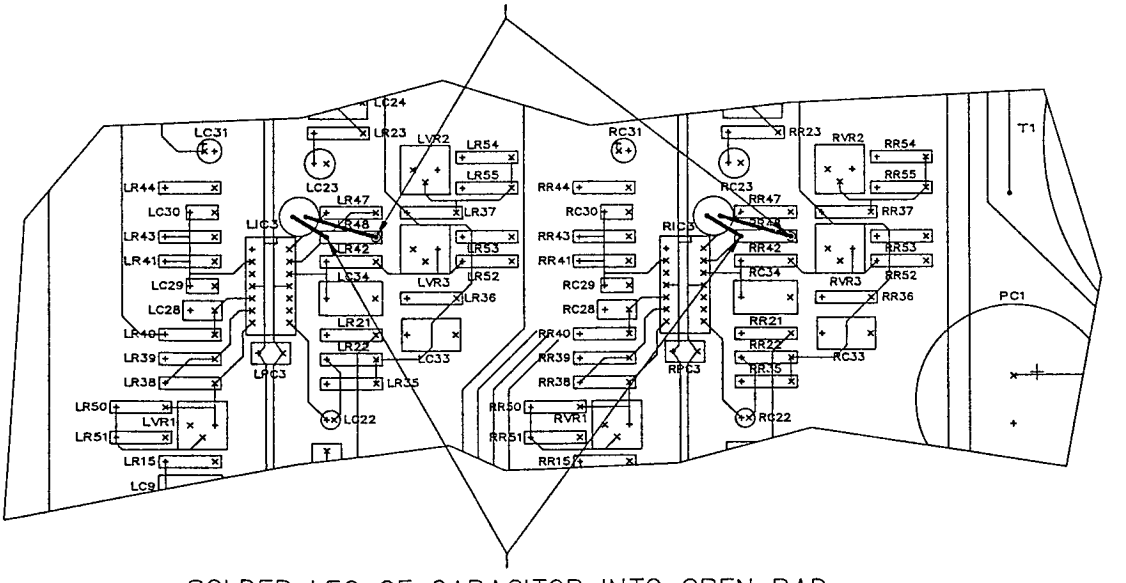

SOLDER LEG OF CAPACITOR INTO OPEN PAD

APPROVED: [signature]
DATE: 3/7/95

8.

REMOVE LC31 AND RC31

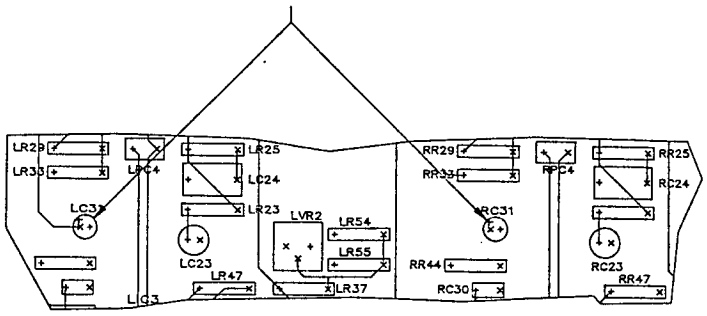

REPLACE LC31 AND RC31 WITH 1uF CAPACITOR

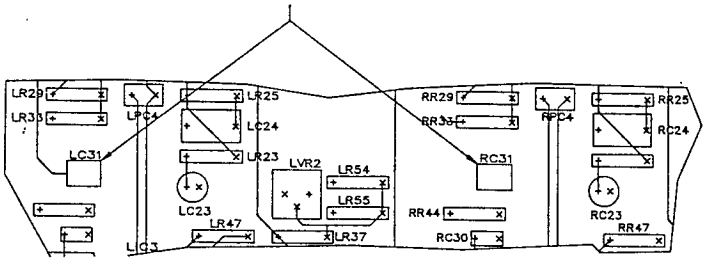

9.

CUT TRACE HERE

REMOVE MASK TO EXPOSE TRACE
SOLDER JUMPER TO TRACE

LC14

REMOVE MASK TO EXPOSE TRACE
SOLDER JUMPER TO TRACE

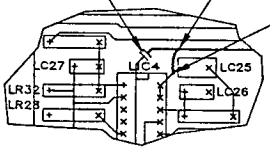

CUT TRACE HERE

SOLDER JUMPER INTO VIA HOLE HERE

LC15

REMOVE MASK TO EXPOSE TRACE
SOLDER JUMPER TO TRACE

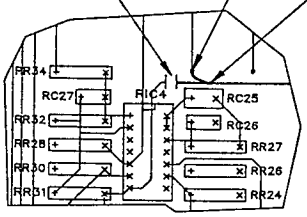

10.

REMOVE LR45 AND RR45
REPLACE WITH 619 OHM RESISTOR

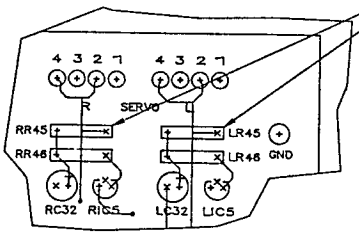

Infinity

SERVO CONTROL UNIT PCB MODIFICA

11.

SET LVR3 TO 3:30 POSI

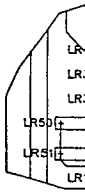

S

inity

DIFICATIONS — PAGE 2 OF 2

SET LVR2 AND RVR2 TO 5:00 POSITION
(FULLY CLOCKWISE)

POSITION

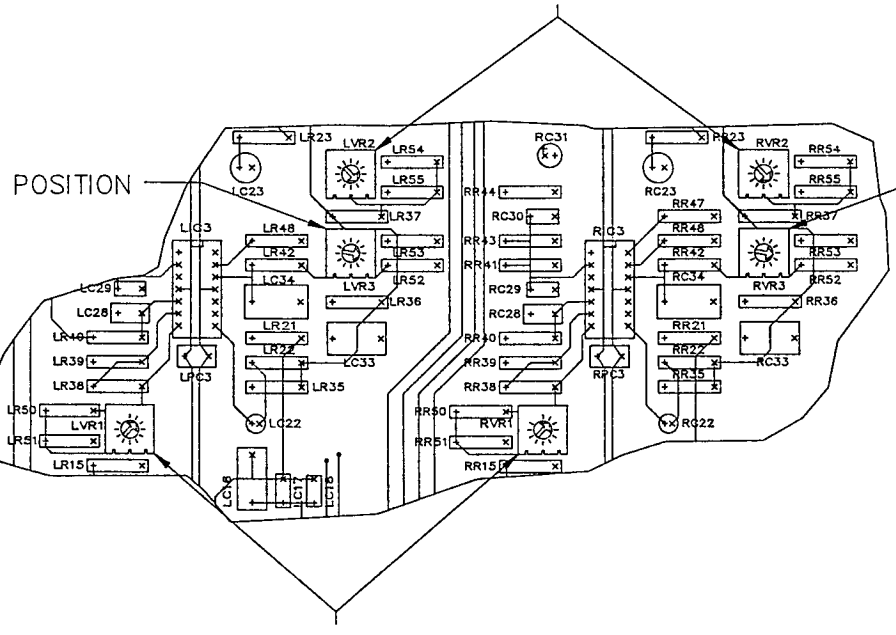

SET RVR3 TO 3:30 POSITION

SET LVR1 AND RVR1 TO 1:30 POSITION

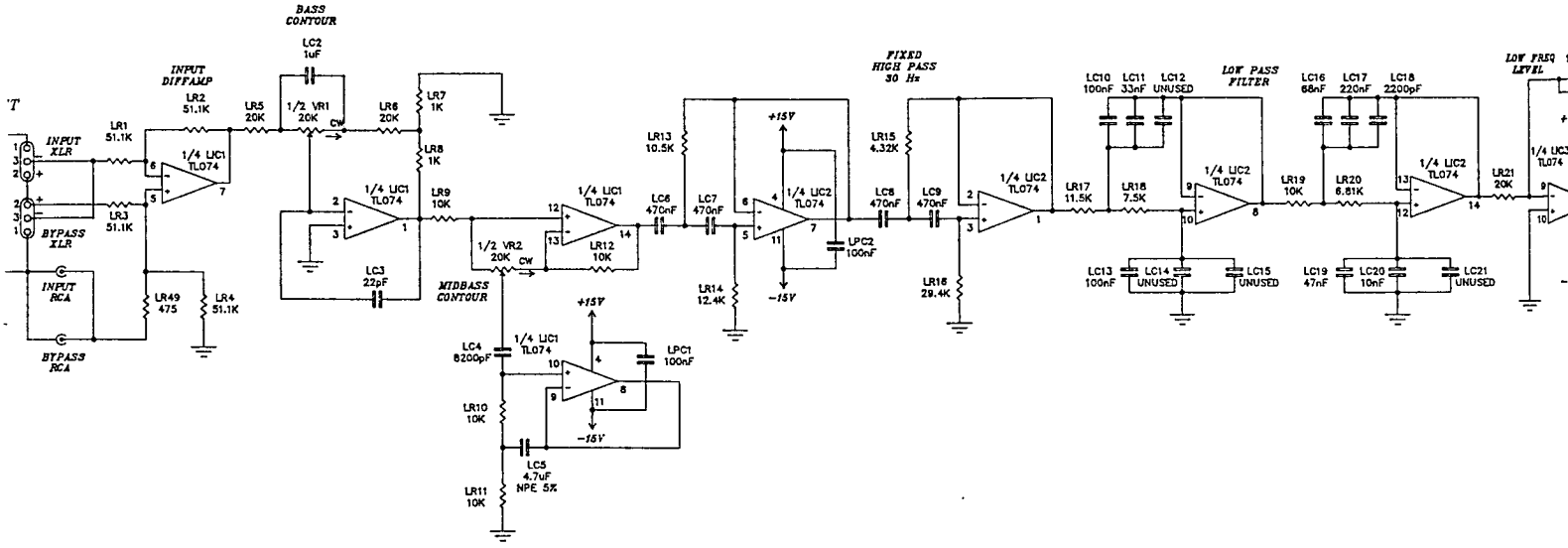

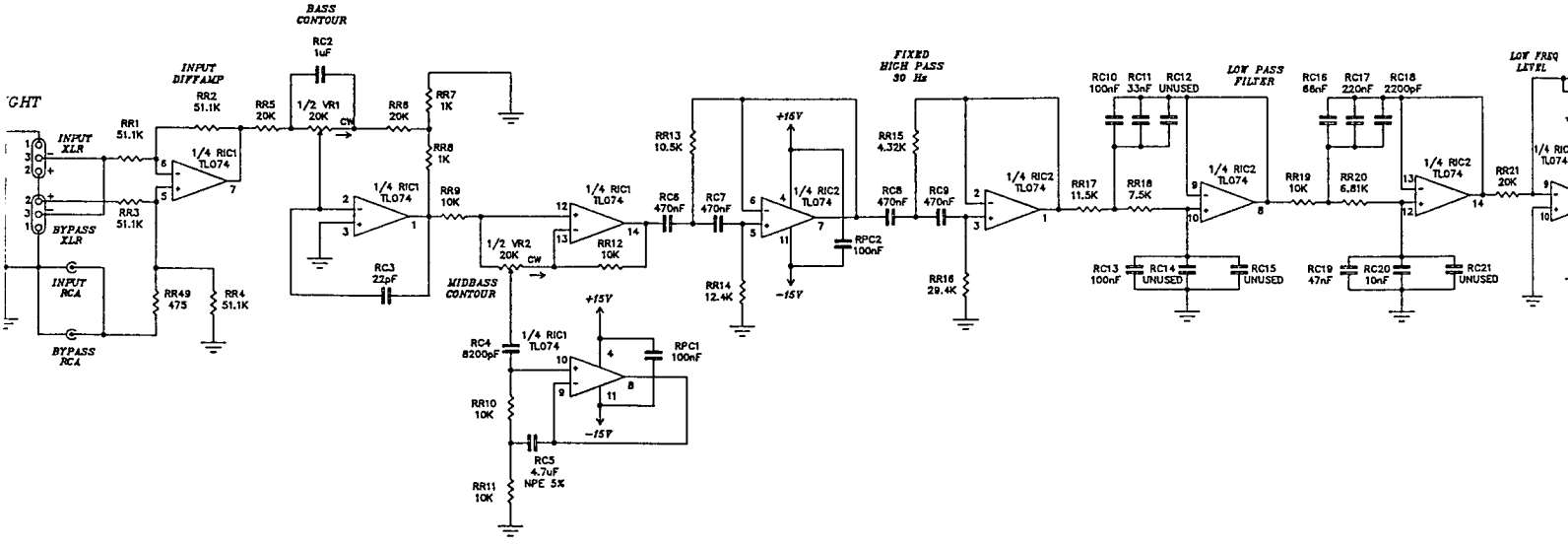

NOTES:
1. RESISTORS TO BE 1/4 WATT, METAL FILM, 1% TOLERANCE UNLESS OTHERWISE SPECIFIED.

REVISIONS				
ECO	REV.	DESCRIPTION	DATE	APPROVED
1346	A	RELEASE FOR PRODUCTION PER ECO 1346	02-22-95	

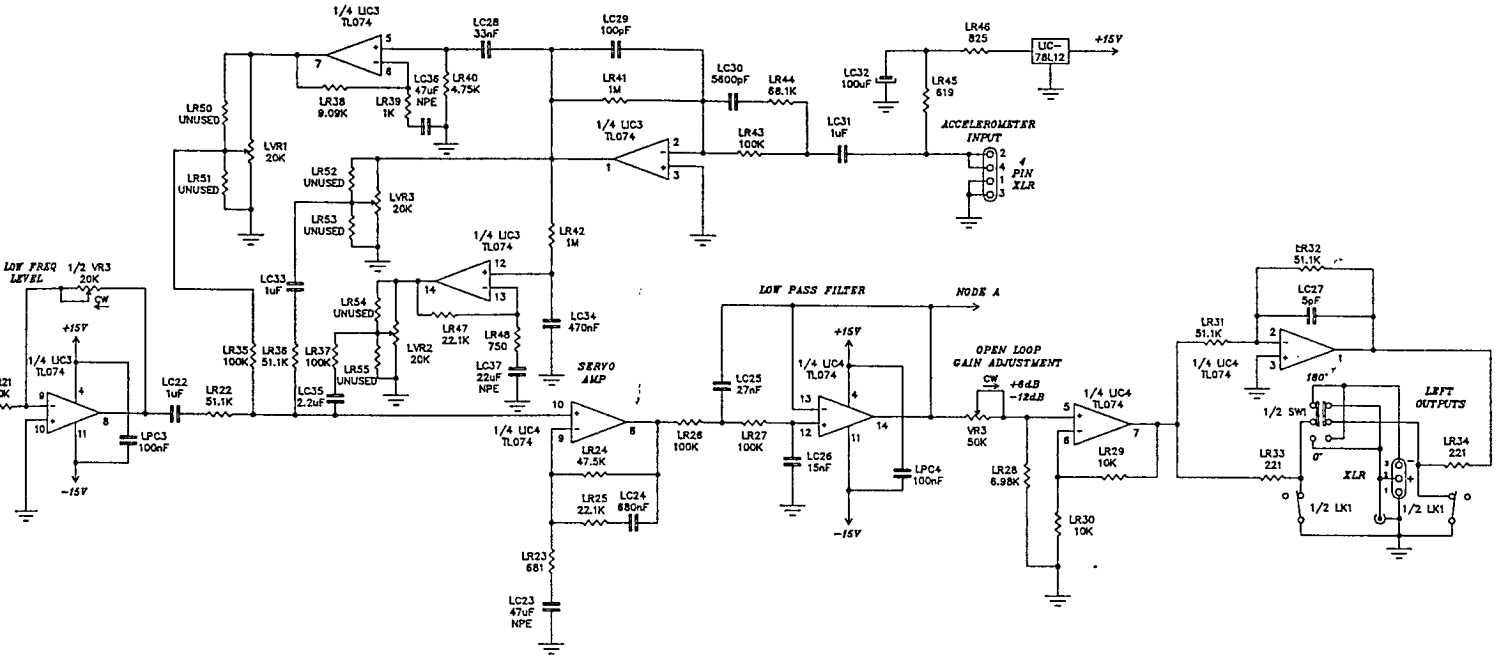

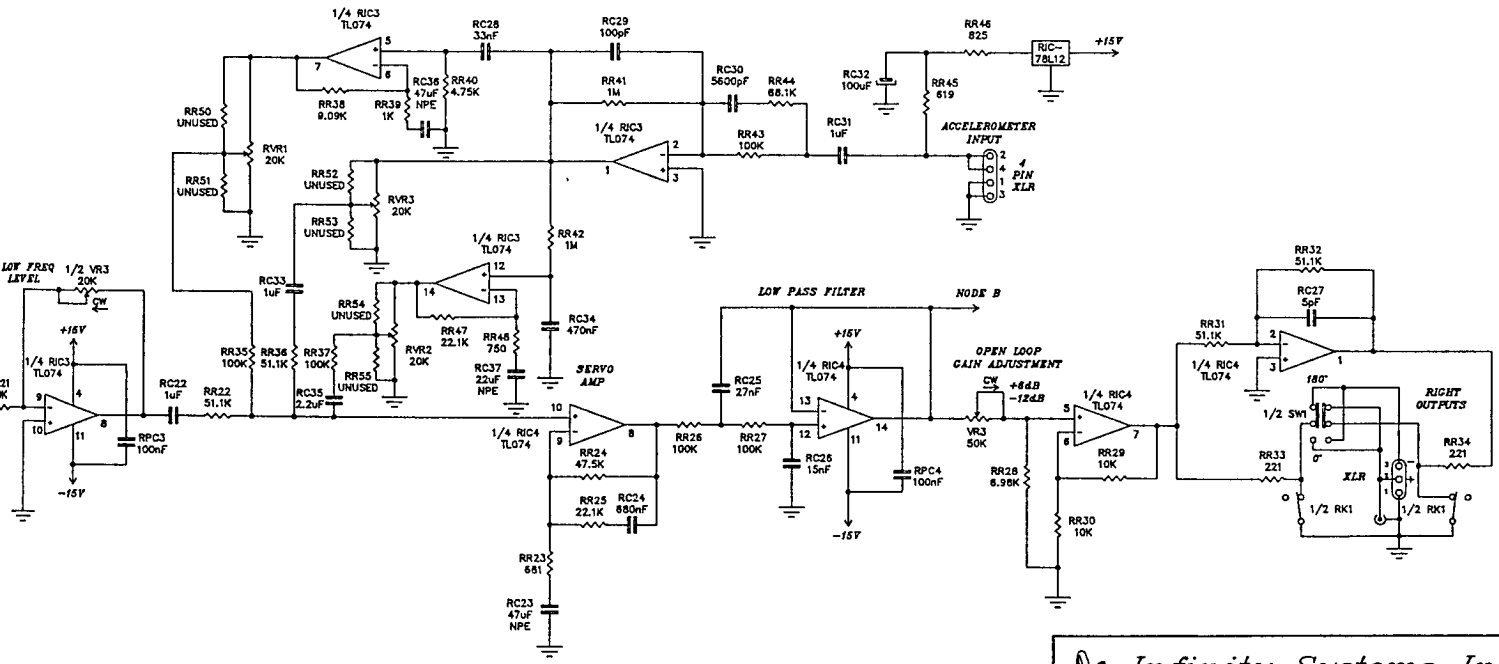

Infinity Systems Inc.

EPSILON SCU

CIRCUIT SCHEMATIC - AUDIO PORTION

P/N: .021...7552

DWG NO: 021-7552-02196-49C

DRAWN BY: R. RAHL

DATE: 02-22-95 | SCALE: N/A

APPROVED: 3-2-95

CAD FILE NAME: EPSILON\SCU\CIRSCHEMA

TOLERANCES: ANG: ± = .5° FRACT. ± = 1/32
DECIMALS: .XX ± = .01 .XXX ± = .005

REVISION: A | SHEET 1 OF 2

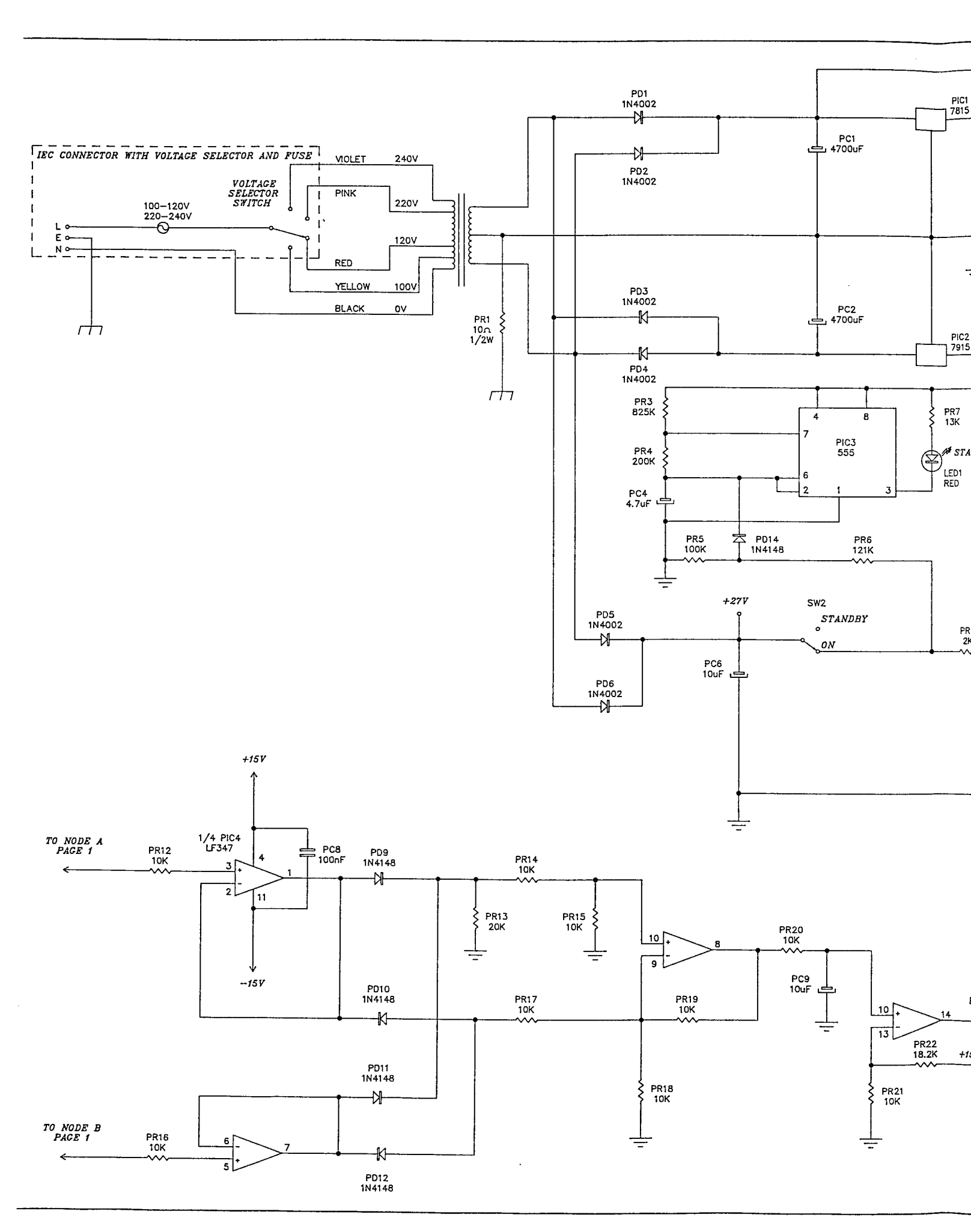
IEC CONNECTOR WITH VOLTAGE SELECTOR AND FUSE
VOLTAGE SELECTOR SWITCH
100–120V
220–240V
L
E
N
VIOLET 240V
PINK 220V
120V
RED
YELLOW 100V
BLACK 0V
PR1 10Ω 1/2W
PD1 1N4002
PD2 1N4002
PD3 1N4002
PD4 1N4002
PC1 4700uF
PC2 4700uF
PIC1 7815
PIC2 7915
PR3 825K
PR4 200K
PC4 4.7uF
PIC3 555
PR7 13K
LED1 RED
PR5 100K
PD14 1N4148
PR6 121K
+27V
SW2
STANDBY
ON
PD5 1N4002
PD6 1N4002
PC6 10uF
+15V
-15V
TO NODE A PAGE 1
PR12 10K
1/4 PIC4 LF347
PC8 100nF
PD9 1N4148
PR14 10K
PR13 20K
PR15 10K
PR20 10K
PC9 10uF
PD10 1N4148
PR17 10K
PR19 10K
PR22 18.2K
PR18 10K
PR21 10K
PD11 1N4148
TO NODE B PAGE 1
PR16 10K
PD12 1N4148

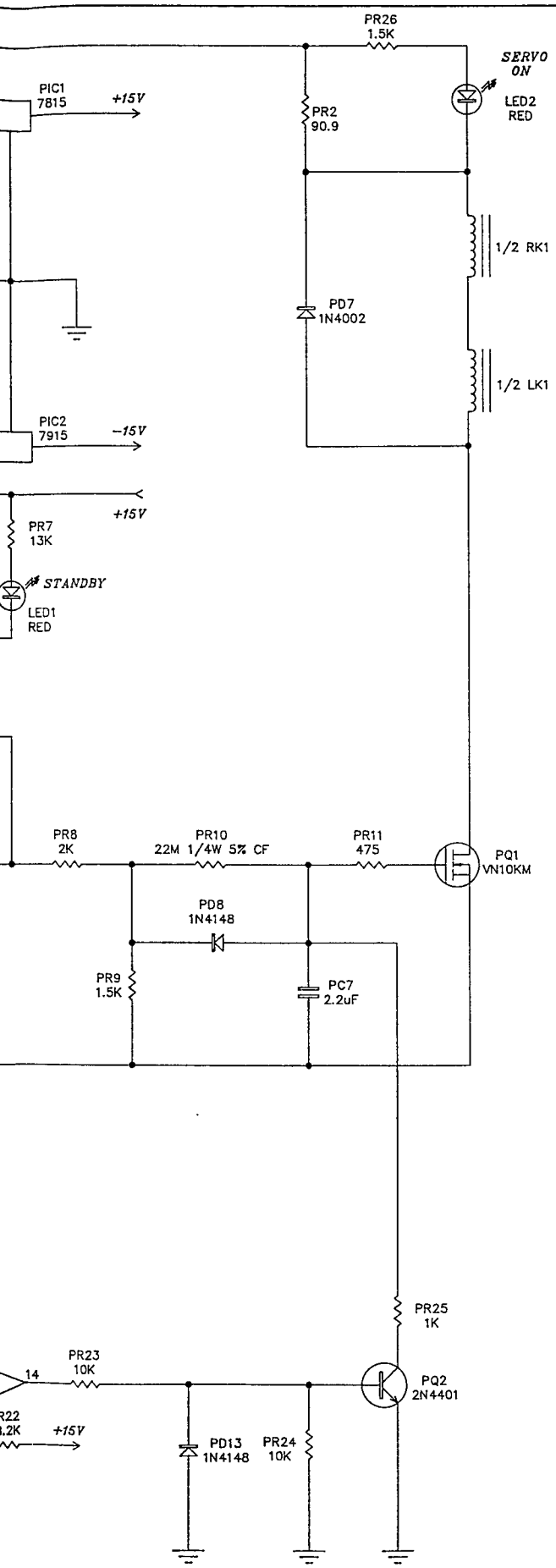

REVISIONS				
ECO	REV.	DESCRIPTION	DATE	APPROVED
–	–	SEE SHEET 1 OF 2	–	

Infinity Systems Inc.

EPSILON SCU

CIRCUIT SCHEMATIC – POWER SUPPLY/PROTECT

P/N: .021...7552

DWG NO: 021-7552-02196-49C

DRAWN BY: R. RAHL

DATE: 02-21-95 | SCALE: N/A

APPROVED:

CAD FILE NAME: EPSILON\SCU\SIGPSCM1

TOLERANCES: ANG: ± = .5° FRACT. ± = 1/32
DECIMALS: .XX ± = .01 .XXX ± = .005

REVISION: A | SHEET 2 OF 2

Procedure: ECC-R-08 - Account: ECC-NMG54

Effectivity Date : 11-18-98

IF30003A - EPSILON SYSTEM

.Level.	X	..Part Number..	PC	.....Description.....	Rev	Quantity.	U/M.	MB	.ECO....	ECO Date	Strt Use	End Use	LdTm	PkOp	*
0	X	IF30003A	K1	EPSILON SYSTEM	X1	1.0000	EA	M					7		
1	P	309903-002	C	S/M,EPSILON,IF30003A	B	1.0000	EA	M			03-01-95		0	10	
2		309311-001	K1	CAB,EPSILON,IF30003	D	1.0000	EA	B			03-01-95		90	10	
2	X	321957-001	K1	ASY,CNTRL,WFR-IF30003A	B	1.0000	EA	M			03-01-95		0	10	
3	X	322041-001	K1	ADAPTOR,SERV,PCB-IF30003A	X3	1.0000	EA	M			03-01-95		5	10	
4		323604-001	K1	RES,3.3MEG,TOL5%,1/8W	*	1.0000	EA	B	INPUT	04-13-95	04-13-95		28	10	
4		323615-001	K1	RES,820K,TOL5%,1/8W	*	1.0000	EA	B	INPUT	04-13-95	04-13-95		28	10	
4		312741-001	K1	RES,470 OHM,TOL5%,1/8W	A	1.0000	EA	B	INPUT	04-19-95	04-19-95		28	10	
4		312763-001	K1	RES,560 OHM,5%,1/8W,CARBON	A	1.0000	EA	B	INPUT	04-19-95	04-19-95		28	10	
4		312774-001	K1	TRIM POT,500K,PIHER PT6KV5	A	1.0000	EA	B			03-01-95		28	10	
4		323648-001	K1	CAP,100pF,10%,100V, DIP MI	*	1.0000	EA	B	INPUT	04-13-95	04-13-95		28	10	
4		312796-001	K1	CAP,.001MF,20%,500V,DSC CE	A	2.0000	EA	B	INPUT	04-19-95	04-19-95		28	10	
4		312805-001	K1	TRANSISTOR,FET,2N5458	A	1.0000	EA	B			03-01-95		28	10	
4		312816-001	K1	INDUC,390UH,.25X.1DIA,AXL,	A	1.0000	EA	B			03-01-95		56	10	
4		322039-001	K1	PC BRD,EPSILON,CNTRL WFR	B	1.0000	EA	B			03-01-95		28	10	
4		310984-001	L*	ADH,HOT/MELT,8"STICK	A	1.0000	GR	B			03-01-95		28	10	
4		309848-001	K4	SOLDER,ERSIN #SN63	A	0.5000	GM	B			03-01-95		28	10	
3		322052-001	K1	ACCELERMETER,EPSILON,CNTRL	A	1.0000	EA	B			03-01-95		60	10	
3		322063-001	K1	SHIELD,ACCELERMETER,EPSILO	A	1.0000	EA	B			03-01-95		28	10	
3		311022-001	K1	TINSEL LEAD,WAXED	A	12.0000	IN	B			03-01-95		56	10	
3		322074-001	K1	DUST CAPS,WFR,EPSILON	*	1.0000	EA	B			03-01-95		50	10	
3	X	322085-001	K1	DOWEL ROD,CUT,1/2"X1/4"	X1	1.0000	EA	M	14726	05-31-95	03-01-95		0	10	
4		322666-001	K1	DOWEL ROD,48"X1/4DIA	*	0.5052	IN	B	14726	05-31-95	03-17-95		14	10	
3		900202-004	K1	SCR,MS,PPH,8-32X .25,ZNC	N/A	2.0000	EA	B	INPUT	03-10-95	03-10-95		28	10	
3		322105-001	K1	8-32 INSERT,NYLON,LOCKNUT,	*	2.0000	EA	B			03-01-95		28	10	
3		311066-001	K4	SOLDER LUG	A	1.0000	EA	B			03-01-95		28	10	
3		322116-001	K1	8-32 HEX STANDOFF	A	4.0000	EA	B			03-01-95		28	10	
3		311077-001	K1	EPOXY	A	2.0000	GM	B			03-01-95		28	10	
3		311088-001	K1	ADH,CONTACT,CEMENT	A	1.0000	OZ	B			03-01-95		28	10	
3		309837-001	K4	ADH,THREADLOCK/#222	A	0.0020	ML	B			03-01-95		28	10	
3		315876-001	K1	RTV,RTV/SILICONE	%	0.5000	OZ	B			03-01-95		28	10	
3		309848-001	K4	SOLDER,ERSIN #SN63	A	2.0000	GM	B			03-01-95		28	10	
3		312202-001	K1	HEATSHRINK,1/4"LX1/16"DIA	A	5.0004	IN	B			03-01-95		28	10	
3		311099-001	K1	WOOFER,12" IMG 4 OHM,W/O D	A	1.0000	EA	B			03-01-95		84	10	
3		322127-001	K1	LABEL,CNTRL WFR	A	1.0000	EA	B			03-01-95		28	10	
3		315865-001	K1	ELECTRICAL TAPE,BLK,.75IN	*	8.0000	IN	B			03-01-95		14	10	
2		309333-001	K1	ASY,GRILLE,FRNT,W/LOGO	A	1.0000	EA	B			03-01-95		90	10	
2		309344-001	K4	GRILLE,REAR,UPPER,IF30003,	A	1.0000	EA	B			03-01-95		90	10	
2		309355-001	K1	GRILLE,REAR,LOWER,	A	1.0000	EA	B			03-01-95		90	10	
2		309377-001	K1	FIBRGL KIT	A	1.0000	EA	B			03-01-95		5	10	
2	X	309388-001	K1	ASY,INPUT	C	1.0000	EA	M			03-01-95		4	10	
3	X	310841-001	K1	ASY,PCB,SWITCH-BD	B	1.0000	EA	M			06-07-94		4	10	
4		311119-001	K1	RES-WW,1.00 OHM,2%,10W	A	2.0000	EA	B			06-07-94		28	10	
4		311121-001	K1	RES-WW,.50 OHM,5%,15W	A	1.0000	EA	B			06-07-94		28	10	
4		311132-001	K1	RES-WW,.25 OHM,5%,10W	A	1.0000	EA	B			06-07-94		28	10	
4		311143-001	K1	RES-WW,.50 OHM,2%,10W	A	1.0000	EA	B			06-07-94		28	10	
4		311154-001	K4	SWITCH,DPDT,C&E SERIES E21	A	1.0000	EA	B			06-07-94		28	10	
4		311165-001	K4	SWITCH,SPDT,C&E SERIES E10	A	2.0000	EA	B			06-07-94		28	10	
4		311176-001	K1	PCB,INPUT,3 OZ COPPER	A	1.0000	EA	B			06-07-94		28	10	
4		309848-001	K4	SOLDER,ERSIN #SN63	A	2.0000	GM	B			06-07-94		28	10	
4		313811-001	K1	ADH,SICOMET,LOCTITE	A	0.1000	GM	B	14726	10-12-94	10-12-94		28	10	
3		310852-001	K1	BINDING POST W/NUTS & WASH	A	2.0000	PR	B			06-07-94		28	10	
3		310863-001	K1	XLR MALE CONNECTOR,4-PIN G	A	1.0000	EA	B			06-07-94		56	10	

Procedure: ECC-R-08 - Account: ECC-NMG54

Effectivity Date : 11-18-98

IF30003A - EPSILON SYSTEM

.Level.	X	..Part Number..	PC	.....Description.....	Rev	Quantity.	U/M.	MB	.ECO....	ECO Date	Strt Use	End Use	LdTm	PkOp *
3		310874-001	K1	BATTERY HOLDER KEYSTONE	A	2.0000	EA	B			06-07-94		28	10
3		310885-001	K4	BLK,BULK MONSTER CABLE SPCA		29.0000	IN	B			06-07-94		28	10
3		310896-001	K4	RED,BULK MONSTER CABLE SPCA		24.0000	IN	B			06-07-94		28	10
3		310905-001	K4	GRAY,BULK MONSTER CABLE SPA		8.0000	IN	B			06-07-94		28	10
3		310916-001	K1	WIRE,4-COND. INFINITY SERVA		24.0000	IN	B			06-07-94		28	10
3		310927-001	K1	CUP,INPUT	B	1.0000	EA	B			06-07-94		28	10
3		310938-001	SC	#6X1/2",PPH,TYPE AB SPCL BN/A		4.0000	EA	B			06-07-94		28	10
3		310949-001	K1	#4X1/2",PPH,TYPE AB SPCL BN/A		8.0000	EA	B			06-07-94		28	10
3		310951-001	K1	#4X1/2",FPH,TYPE AB SPCL BN/A		2.0000	EA	B			06-07-94		28	10
3		310962-001	K4	LOCKWASHER,INT #6	N/A	4.0000	EA	B			06-07-94		28	10
3		301042-001	0	GASKET,TAPE,3/8,1/16	A	2.4167	LF	B	14726	02-14-95	02-15-95		28	10
3		310984-001	L*	ADH,HOT/MELT,8"STICK	A	5.0000	GR	B			06-07-94		28	10
3		309848-001	K4	SOLDER,ERSIN #SN63	A	2.0000	GM	B			06-07-94		28	10
3		310995-001	K1	LBL,LEXAN,INPUT CUP	A	1.0000	EA	B			06-07-94		28	10
2		309408-001	K4	SPIKED FOOT	A	4.0000	EA	B			03-01-95		35	10
2		309419-001	K4	COVER,SPIKED FOOT	A	4.0000	EA	B			03-01-95		21	10
2		309421-001	K4	SCR,6-32x.625,THUMB,BRASS	A	4.0000	EA	B			03-01-95		21	10
2		309432-001	K1	SERIAL NUMBER,EPSILON	A	0.5000	EA	B			03-01-95		5	10
2		309443-001	K4	PAD,EMIT,DIAPER	A	4.0000	EA	B			03-01-95		42	10
2		309454-001	K1	INPUT PLATE	B	1.0000	EA	B			03-01-95		56	10
2		309465-001	K1	PAD,EMIT RISER	A	1.0000	EA	B			03-01-95		28	10
2		309476-001	K3	STANDOFF,PCB	A	8.0000	EA	B			03-01-95		28	10
2		309487-001	K1	COVER PLATE	B	0.5000	ST	B			03-01-95		56	10
2		309498-001	K4	WASHER,#8,NYLON	A	4.0000	EA	B			03-01-95		28	10
2	X	309507-001	K1	ASY,PCB,TWTR	E	1.0000	EA	M			03-01-95		4	10
3		310729-001	K1	RES,5.0M,5%,1/4W,CARBON FIA		2.0000	EA	B			06-07-94		28	10
3		310731-001	K1	RES-WW,2.00 OHM,2%,10W	A	1.0000	EA	B			06-07-94		28	10
3		310467-001	K1	CAP,.01UF,20%,630V,POLYSTYA		4.0000	EA	B			06-07-94		28	10
3		310742-002	K1	CAP.,5.60UF,2%,400V,POLY,S*		4.0000	EA	B	15073	09-15-94	09-16-94		42	10
3		310753-002	K1	CAP,3.9UF,2%,400V,POLY,SOL*		3.0000	EA	B	14726	09-27-94	09-28-94		42	10
3		310764-002	K1	CAP.,4.30UF,2%,400V,POLY,S*		1.0000	EA	B	14726	09-27-94	09-28-94		42	10
3		310775-002	K1	INDUC,.20MH,1%,IRN SLG,10XA		1.0000	EA	B	14967	08-04-94	08-09-94		28	10
3		310786-002	K1	INDUC,1.00MH,1%,I-STEEL LAA		1.0000	EA	B	14967	08-04-94	08-09-94		28	10
3		310797-001	K1	BLANK PCB,3 OZ COPPER,TWEEA		1.0000	EA	B			06-07-94		28	10
3		310806-001	K4	BLUE,BULK MONSTER CABLE SPA		66.0000	IN	B			06-07-94		28	10
3		310817-001	K4	GREEN,BULK MONSTER CABLE SA		74.0000	IN	B			06-07-94		28	10
3		310828-001	K1	BULK WIRE 20GA AWG RED	A	48.0000	IN	B			06-07-94		28	10
3		310839-001	K1	BULK WIRE 20GA AWG BLACK	*	48.0000	IN	B			06-07-94		28	10
3		309848-001	K4	SOLDER,ERSIN #SN63	A	2.0000	GM	B			06-07-94		28	10
3		310608-001	K4	TYWRAP,8" BLACK-DENNISON #A		15.0000	EA	B			06-07-94		21	10
2	X	309518-001	K1	ASY,PCB,MIDBASS	E	1.0000	EA	M			03-01-95		4	10
3		310619-001	K1	CAP,128.0UF,2%,100V,NPE	A	1.0000	EA	B			06-07-94		63	10
3		310621-002	K1	CAP,62.0UF,2%,400V,POLY,SOA		1.0000	EA	B	15073	09-15-94	09-15-94		42	10
3		310632-002	K1	CAP.,20.0UF,2%,400V,POLY,SA		3.0000	EA	B	14726	10-20-94	10-20-94		42	10
3		310643-002	K1	CAP,2.0UF,2%,400V,POLY,SOL*		1.0000	EA	B	15073	09-15-94	09-15-94		42	10
3		310654-001	K1	INDUC,4.30MH,2%,EI,STL LAMA		1.0000	EA	B			06-07-94		28	10
3		310665-001	K1	INDUC,3.50MH,2%,EI,STL LAMA		1.0000	EA	B			06-07-94		28	10
3		310676-001	K1	INDUC,1.00MH,2%,EI,STL LAMA		1.0000	EA	B			06-07-94		28	10
3		310687-001	K1	BLANKPCB, 3 OZ COPPER,MIDBA		1.0000	EA	B			06-07-94		28	10
3		310698-001	K4	YELLOW,BULK MONSTER CABLE A		66.0000	IN	B	14726	10-12-94	10-12-94		28	10
3		310707-001	K4	BROWN,BULK MONSTER CABLE SA		66.0000	IN	B	14726	10-12-94	10-12-94		28	10
3		309848-001	K4	SOLDER,ERSIN #SN63	A	2.0000	GM	B			06-07-94		28	10
3		310608-001	K4	TYWRAP,8" BLACK-DENNISON #A		6.0000	EA	B			06-07-94		21	10

Procedure: ECC-R-08 - Account: ECC-NMG54

Effectivity Date : 11-18-98

IF30003A - EPSILON SYSTEM

.Level.	X	..Part Number..	PC	.....Description.....	Rev	Quantity.	U/M.	MB	.ECO....	ECO Date	Strt Use	End Use	LdTm	PkOp	*
3		310718-001	K4	TYWRAP,15"BLACK-DENNISON	A	3.0000	EA	B			06-07-94		28	10	
2	X	309529-001	K1	ASY,PCB,MIDRNG	E	1.0000	EA	M			03-01-95		4	10	
3		310445-001	K1	CAP,30.0UF,2%,100V,NPE	A	1.0000	EA	B			06-07-94		63	10	
3		310456-001	K1	CAP,2.50UF,2%,100V,NPE	A	1.0000	EA	B			06-07-94		63	10	
3		310467-001	K1	CAP,.01UF,20%,630V,POLYSTY	A	2.0000	EA	B			06-07-94		28	10	
3		310478-002	K1	CAP.,10.0UF,2%,400V,POLY,S*		1.0000	EA	B	15073	09-15-94	09-16-94		42	10	
3		310489-002	K1	CAP.,5.10UF,2%,400V,POLY,S*		2.0000	EA	B	14726	09-27-94	09-28-94		42	10	
3		310491-002	K1	CAP.,30.0UF,2%,400V,POLY,S*		2.0000	EA	B	15073	09-15-94	09-16-94		42	10	
3		310632-002	K1	CAP.,20.0UF,2%,400V,POLY,S	A	1.0000	EA	B	15073	09-15-94	09-16-94		42	10	
3		310511-002	K1	CAP.,4.70UF,2%,400V,POLY,S*		1.0000	EA	B	15073	09-15-94	09-16-94		42	10	
3		310522-002	K1	INDUC,.21MH,1%,IRON SLUG,1	A	1.0000	EA	B	14967	08-04-94	08-09-94		20	10	
3		310533-002	K4	INDUC,.45MH,1%,IRON SLUG,1	A	1.0000	EA	B	14967	08-04-94	08-09-94		20	10	
3		310544-002	K1	.40MH,1%,IRON SLUG,10X40,.	A	1.0000	EA	B	14967	08-04-94	08-09-94		20	10	
3		310555-001	K1	BLANKPCB,3 OZ COPPER,MIDR	A	1.0000	EA	B			06-07-94		28	10	
3		310566-001	K4	WHITE,BULK MONSTER CABLE	S	60.0000	IN	B			06-07-94		28	10	
3		310577-001	K4	ORANGE,BULK MONSTER CABLE	A	60.0000	IN	B			06-07-94		28	10	
3		310588-001	K4	BUSS WIRE 18 AWG	A	1.7500	IN	B			06-07-94		28	10	
3		309848-001	K4	SOLDER,ERSIN #SN63	A	2.0000	GM	B			06-07-94		28	10	
3		310608-001	K4	TYWRAP,8" BLACK-DENNISON #	A	15.0000	EA	B			06-07-94		21	10	
3		310764-002	K1	CAP.,4.30UF,2%,400V,POLY,S*		1.0000	EA	B	14726	09-27-94	09-28-94		42	10	
2		319038-001	K1	SCR,8-32X5/8,FLHHXS,BRASS	A	4.0000	EA	B			03-01-95		28	10	
2		309553-001	K1	8-32 X 1-1/4 PPH,SPCL,BLK	A	10.0000	EA	B			03-01-95		28	10	
2		309564-001	0	8 X 3/4 STANDOFF	A	10.0000	EA	B			03-01-95		28	10	
2		301042-001	0	GASKET,TAPE,3/8,1/16	A	4.5833	LF	B			03-01-95		28	10	
2		309586-001	K1	8-32 X 1-3/4 FSOH,SPCL,BLK	A	13.0000	EA	B			03-01-95		28	10	
2		309597-001	K4	RING,LOCKING	A	4.0000	EA	B			03-01-95		28	10	
2		309606-001	K4	10-32 X 1 PPH,SPCL,BLK	A	8.0000	EA	B			03-01-95		28	10	
2		63991	0	DACRON-1407	B	1.7600	LB	B			03-01-95		7	10	
2	X	309617-001	K1	LEMIM MIDBASS	B	1.0000	EA	M			03-01-95		4	10	
3		311187-001	K4	LEAD WIRE #24GA	A	3.5000	IN	B			06-07-94		28	10	
3		311198-001	K4	BUSS WIRE #24GA	A	1.0000	IN	B			06-07-94		28	10	
3		311207-001	K1	BAR,TENSION	A	1.0000	EA	B			06-07-94		28	10	
3	X	311218-001	K1	ASY,MAG,PLT,FRNT	B	1.0000	EA	M			06-07-94		1	10	
4		315898-001	K4	ADH,LOCTITE/#32430	A	1.6907	ML	B			09-16-94		28	10	
4		315907-001	K4	ACTIVATOR,LOCTITE,#70715	A	1.6907	OZ	B			09-16-94		28	10	
4	X	316013-002	K1	FAB.,FRONT MAGNET PLATE,P	A	1.0000	EA	M			09-16-94		7	10	
5		316013-001	K1	FABRICATION,FRONT MAGNET P	B	1.0000	EA	B	14970	09-16-94	09-16-94		56	10	
5		60902S	LQ	PWDFLT-BLK,O/P-1500	B	0.1400	LB	B	14726	10-03-94	10-03-94		35	10	
5		66449	RS	BAG,POLY,14X18,.002THK	C	1.0000	EA	B	14726	10-03-94	10-03-94		20	10	
5		301645-001	L@	TAPE,MASKING,1",72 YD ROL	A	0.0400	RL	B	14726	10-03-94	10-03-94		28	10	
4		316486-001	K1	MAGNET,CERAMIC SS420	A	33.0000	EA	B			09-16-94		98	10	
3	X	311229-001	K1	ASY,MAG-PL,REAR	B	1.0000	EA	M			06-07-94		1	10	
4		315898-001	K4	ADH,LOCTITE/#32430	A	1.6907	ML	B			09-16-94		28	10	
4		315907-001	K4	ACTIVATOR,LOCTITE,#70715	A	1.6907	OZ	B			09-16-94		28	10	
4	X	316024-002	K1	FAB.,REAR MAGNET PLATE,PA	B	1.0000	EA	M			09-16-94		7	10	
5		316024-001	K1	FABRICATION,REAR MAGNET P	B	1.0000	EA	B	14970	09-16-94	09-16-94		56	10	
5		60902S	LQ	PWDFLT-BLK,O/P-1500	B	0.1400	LB	B	14726	10-03-94	10-03-94		35	10	
5		66449	RS	BAG,POLY,14X18,.002THK	C	1.0000	EA	B	14726	10-03-94	10-03-94		20	10	
5		301645-001	L@	TAPE,MASKING,1",72 YD ROL	A	0.0400	RL	B	14726	10-03-94	10-03-94		28	10	
4		316486-001	K1	MAGNET,CERAMIC SS420	A	33.0000	EA	B			09-16-94		98	10	
3		311231-001	K1	DIAPHRAGM/DIE CUT	*	1.0000	EA	B			06-07-94		90	10	
3		311242-001	K4	EYELET,BRS,SML	A	1.0000	EA	B			06-07-94		28	10	
3		311253-001	K4	EYELET,BRS,LRG	A	2.0000	EA	B			06-07-94		28	10	

Procedure: ECC-R-08 - Account: ECC-NMG54

Effectivity Date : 11-18-98

IF30003A - EPSILON SYSTEM

.Level.	X	..Part Number..	PC	.....Description.....	Rev	Quantity.	U/M.	MB	.ECO....	ECO Date	Strt Use	End Use	LdTm	PkOp *
3	P	311264-001	K1	SILK,BLACK CHINA 10X15	X1	1.0000	EA	M			06-07-94		0	10
4		317492-001	K4	CLOTH,SILK,24"WIDE	*	0.2080	LY	B			09-20-94		35	10
3		311275-001	K4	TERMINAL,BRASS	A	2.0000	EA	B			06-07-94		35	10
3		311286-001	K1	DIAPHRAGM FRAME,FRONT	A	1.0000	EA	B			06-07-94		42	10
3		311297-001	K1	DIAPHRAGM FRAME,REAR	A	1.0000	EA	B			06-07-94		42	10
3		311306-001	K1	SCR,6-32x.812,FSOH	N/A	10.0000	EA	B			06-07-94		28	10
3		311317-001	K4	SOLDER,ALUM	A	0.5000	GM	B			06-07-94		28	10
3		309848-001	K4	SOLDER,ERSIN #SN63	A	0.5000	GM	B			06-07-94		28	10
3		311328-001	K1	LABEL,DATE CODE	A	1.0000	EA	B			06-07-94		7	10
3		313745-001	K1	PSA TAPE	*	4.0000	EA	B	14885	07-08-94	07-09-94		28	10
3		311341-001	K1	TAPE,PSA,1/4W	A	200.0000	IN	B			06-07-94		28	10
3		311352-001	K1	FOAM,POLYESTER	A	2.0000	EA	B			06-07-94		28	10
3		311363-001	K1	FOAM,POLYESTER	A	2.0000	EA	B			06-07-94		28	10
3		310599-001	K1	FOAM,POLYESTER	A	4.0000	EA	B			06-07-94		28	10
2	X	309628-001	K4	EMIM,NEODYMIUM,MIDRNG,IRS	D	1.0000	EA	M			03-01-95		4	10
3		311187-001	K4	LEAD WIRE #24GA	A	1.5000	IN	B			06-07-94		28	10
3		311198-001	K4	BUSS WIRE #24GA	A	1.0000	IN	B			06-07-94		28	10
3		311374-001	K4	BAR,TENSION	A	1.0000	EA	B			06-07-94		28	10
3	X	311385-001	K4	ASY,MAG,PLT,CHRGED/FRNT	X1	1.0000	EA	M	21242	07-15-98	07-15-98		56	
4		311385-002		MAG PLT UN-MAGTZED,FRONT	B	1.0000	EA	B						10
3	X	334530-001		ASY,MAG,MAGIZED	A	1.0000	EA	M	21242	07-15-98	07-15-98			
4		334528-001		MAG,PLTD,REAR	A	1.0000	EA	B						10
3		311405-001	K4	DIAPHRAGM,W/.3 MIL KPTN/3M	A	1.0000	EA	B			06-07-94		28	10
3		311242-001	K4	EYELET,BRS,SML	A	1.0000	EA	B			06-07-94		28	10
3		311253-001	K4	EYELET,BRS,LRG	A	2.0000	EA	B			06-07-94		28	10
3		311275-001	K4	TERMINAL,BRASS	A	2.0000	EA	B			06-07-94		35	10
3		311416-001	K4	DIAPHRAGM FRAME,FRONT	A	1.0000	EA	B			06-07-94		28	10
3		311427-001	K4	DIAPHRAGM FRAME,REAR	A	1.0000	EA	B			06-07-94		28	10
3		908201-009		SCR,MS,FHXS,4-40x9/16,BLK	N/A	8.0000	EA	B	20959	04-02-98	04-02-98			
3		311449-001	K4	MYLAR SPACER	A	1.0000	EA	B			06-07-94		28	10
3		311317-001	K4	SOLDER,ALUM	A	0.5000	GM	B			06-07-94		28	10
3		309848-001	K4	SOLDER,ERSIN #SN63	A	0.5000	GM	B			06-07-94		28	10
3		311451-001	K4	FOAM INSERT,DIE CUT,3.3X.5	A	2.0000	EA	B			06-07-94		28	10
3		311462-001	K4	PLASTIC BAG 5X10 3MIL	A	1.0000	EA	B			06-07-94		28	10
3		311473-001	K4	LABEL,DATE CODE,NEO.EMIN	A	1.0000	EA	B			06-07-94		7	10
3		311339-001	K4	TAPE,PSA,1/2W	A	6.5000	IN	B			06-07-94		28	10
3		311484-001	K4	FOAM,ESTER 100PPI,W/PSA,5"	A	4.0000	EA	B			06-07-94			10
3		315898-001	K4	ADH,LOCTITE/#32430	A	1.6907	ML	B	14970	08-22-94	08-22-94		28	10
3		315907-001	K4	ACTIVATOR,LOCTITE,#70715	A	1.6907	OZ	B	14970	08-22-94	08-22-94		28	10
2		309641-001	K4	8-32 X 1-1/4 FSOH,SPL,BLK	A	8.0000	EA	B			03-01-95		28	10
2		309652-001	K4	EMIT-B	A	2.0000	EA	B			03-01-95		98	10
2		309663-001	0	PAD,RISER	A	2.0000	EA	B			03-01-95		28	10
2		309674-001	K4	8-32 X 1 FPH,SPL,BLK	A	4.0000	EA	B			03-01-95		28	10
2		309696-001	0	HOLE PLUG 3/8,MAT BLK	A	2.0000	EA	B			03-01-95		28	10
2		309705-001	K1	8-32 X 1-1/4 ALN CAP,SPL,B	A	8.0000	EA	B			03-01-95		28	10
2		309716-001	K4	8-32 X 3/4 PPH,SPCL,BLK	A	8.0000	EA	B			03-01-95		28	10
2		309727-001	K4	TY-WRAP MTG BASE	A	2.0000	EA	B			03-01-95		28	10
2		309947-001	L7	TY-WRAP	A	2.0000	EA	B			03-01-95		56	10
2		309738-001	K1	CTN,IF30003,EPSILON	B	1.0000	EA	B			03-01-95		28	10
2		309749-001	K4	FOAM,BOTTOM	A	1.0000	EA	B			03-01-95		28	10
2		309751-001	K4	FOAM,TOP	A	1.0000	EA	B			03-01-95		28	10
2		72298	0	FIBER MTRL.36"X 24"	B	4.0000	EA	B			03-01-95		14	10
2		309773-001	K1	ASY,CABLE,SERVO-IF30003	A	1.0000	EA	B			03-01-95		56	10

Procedure: ECC-R-08 - Account: ECC-NMG54

Effectivity Date : 11-18-98

IF30003A - EPSILON SYSTEM

.Level.	X	..Part Number..	PC	.....Description.....	Rev	Quantity.	U/M.	MB	.ECO....	ECO Date	Strt Use	End Use	LdTm	PkOp *
2		49790P	L.	PKG,MICROFOAM	A	8.0000	EA	B			03-01-95		21	10
2		309795-001	K4	PLASTIC SHEET	A	1.0000	EA	B			03-01-95		28	10
2	P	303611-176	C	BRCD,IF30003A	A	1.0000	EA	M			03-01-95		0	10
3		72471	Z	RIBBON,XFR,THRM,4.5"x1180	A	4.7500	IN	B					21	10
3		73265	Z	LBL STOCK,4.625X4.12	A	1.0000	EA	B					28	10
2		315205-001	0	STAPLE, JK56022 7/8" J. KI	A	30.0000	EA	B	INPUT	03-03-95	03-01-95		56	10
2		65012	0	TAPE,CTN,3"X3000LINFT	A	18.0000	LF	B			03-01-95		21	10
2		309815-001	K1	RES,WW,8OHM,5W,5%	A	1.0000	EA	B			03-01-95		28	10
2		309914-001	K4	VIOLET,BULK MONSTER CABLE,	A	9.0000	IN	B			03-01-95		42	10
2		62905	SS	SCR#8X1"PANHD PH BLK	B	4.0000	EA	B			03-01-95		28	10
2		309837-001	K4	ADH,THREADLOCK/#222	A	0.0140	ML	B			03-01-95		28	10
2		309848-001	K4	SOLDER,ERSIN #SN63	A	10.0000	GM	B			03-01-95		28	10
2		309859-001	K4	HEATSHRINK,BLK,1/4 X 1/2	A	15.0000	EA	B			03-01-95		28	10
2		309861-001	K1	9 VOLT BATTERY	A	2.0000	EA	B			03-01-95		28	10
2		330033-001	SR	SURVEY CARD, INFINITY	A	1.0000	EA	B	19528	12-17-96	12-17-96			
2		309883-001	K4	FOAM TUBING 3"	A	3.0000	EA	B			03-01-95		28	10
2		311341-001	K1	TAPE,PSA,1/4W	A	16.0000	IN	B			03-01-95		28	10
2		315216-001	0	PAD,DAMPENING,SND	A	1.0000	EA	B			03-01-95		45	10
2		317173-001	K1	8-32X1/2 BUTTON SCOCKET HD	A	4.0000	EA	B			03-01-95		28	10
2		318364-001	K1	WSHR,FL,#8	A	6.0000	EA	B			03-01-95		28	10

INFINITY SYSTEMS, INC. PROPRIETARY
This document contains confidential and proprietary information that is the property of Infinity Systems, Inc. and may not be disclosed to others or duplicated for others except as authorized by Infinity Systems, Inc.

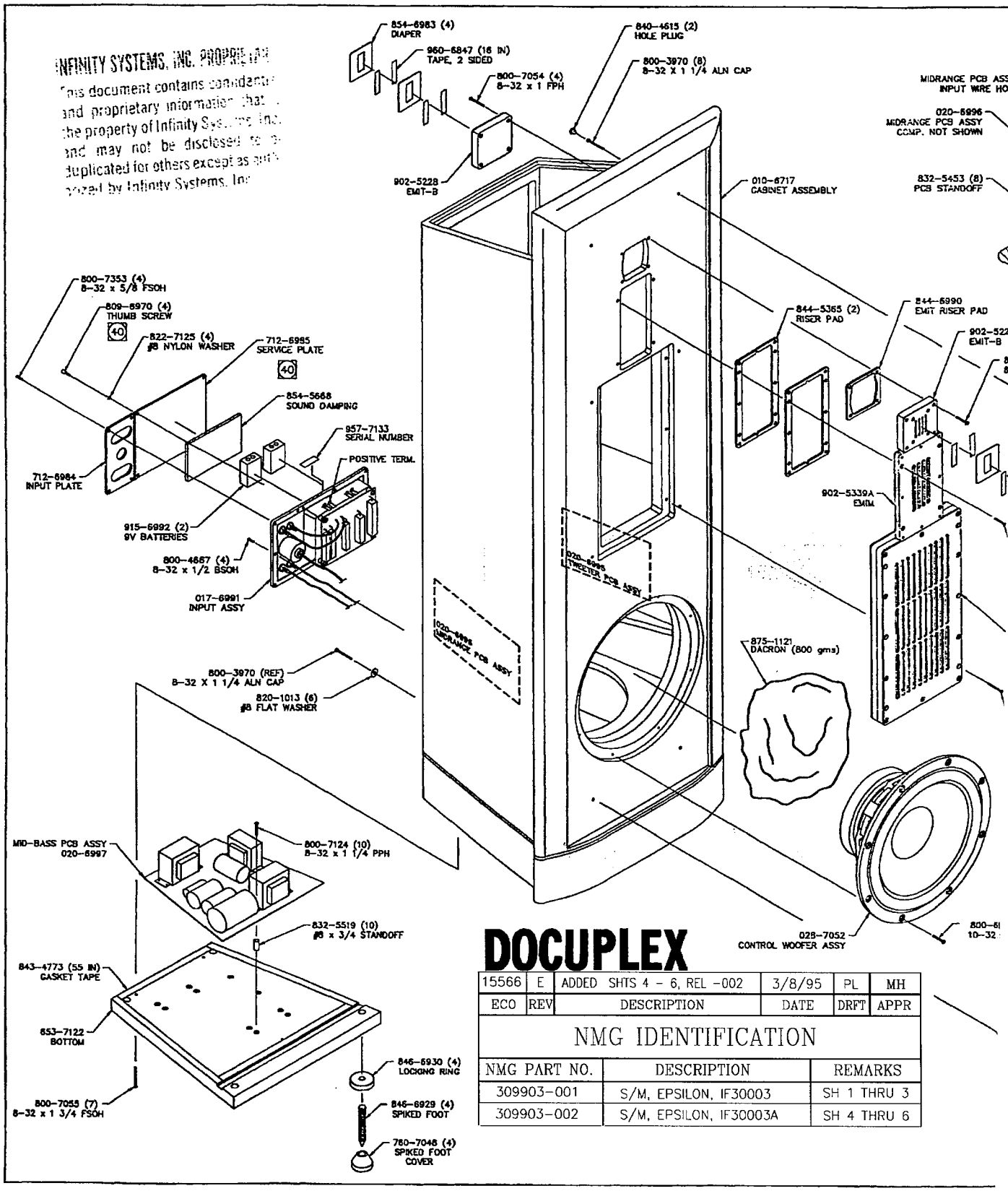

DOCUPLEX

ECO	REV	DESCRIPTION	DATE	DRFT	APPR
15566	E	ADDED SHTS 4 - 6, REL -002	3/8/95	PL	MH

NMG IDENTIFICATION

NMG PART NO.	DESCRIPTION	REMARKS
309903-001	S/M, EPSILON, IF30003	SH 1 THRU 3
309903-002	S/M, EPSILON, IF30003A	SH 4 THRU 6

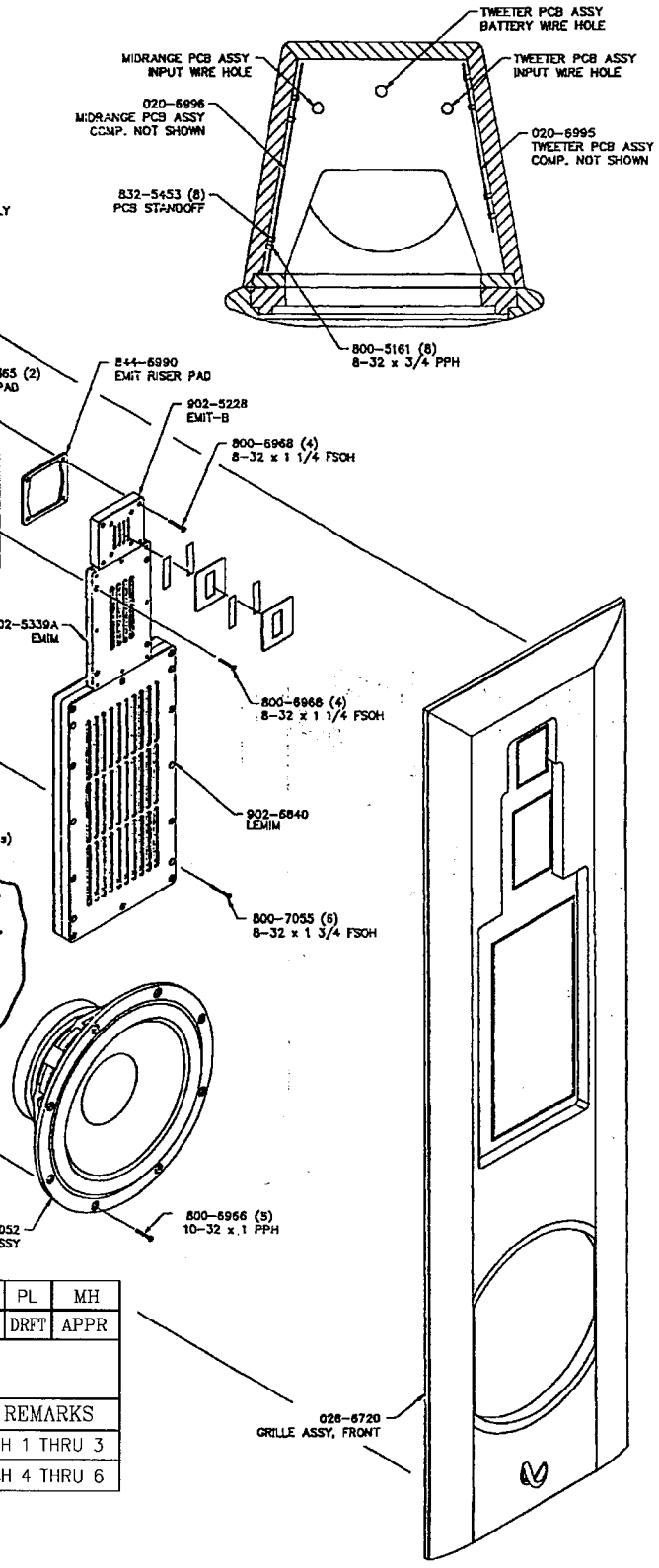

PL	MH
DRFT	APPR

REMARKS
H 1 THRU 3
H 4 THRU 6

REVISIONS

ECO	REV.	DESCRIPTION	DATE	APPROVED
	A	RELEASED FOR PRODUCTION	03-11-94	J.I.
1279	B	CHANGE NOTE 6	03-24-94	J.M. J.I.
1287	C	REVISE ASSY ORDER, ADD WASHER, 9" VIOLET WIRE WAS 6"	05-11-94	J.M. J.I.
1300	D	ADD #8 FLAT WASHER, NOTE 31	06-08-94	J.I.
1317	E	ADD (2) 9V BATTERIES AND SOUND DAMPING, 800-4667 WAS 800-4438 (X-OVER SCREWS)	08-05-94	J.I.
1333	F	800-7353 WAS 800-6967 (INPUT SCREWS)	10-24-94	10-25-94

NOTES:

1. REMOVE (2) TEMPORARY SCREWS HOLDING PANEL (BETWEEN EMIM & LEMIM). REMOVE PANEL AND DISCARD SCREWS.
2. INSERT PCB STANDOFFS (832-5453) INTO PCB FROM THE BOTTOM SIDE OF TWEETER PCB ASSEMBLY (020-6995) AND TO MIDRANGE PCB ASSEMBLY (020-6996), 4 PLACES EACH.
3. AS INDICATED, INSTALL TWEETER PCB ASSEMBLY USING 8-32 x 3/4 PPH (800-5161), 4 PLACES. USE THREAD LOCK (855-7136) ON ALL MACHINE SCREWS, EXCEPT AS NOTED.
4. AS INDICATED, INSTALL MIDRANGE PCB ASSEMBLY USING 8-32 x 3/4 PPH (800-5161), 4 PLACES.
5. PLACE #3 x 3/4 STANDOFF (832-5519) IN EACH CBORE ON BOTTOM (653-7122), 10 PLACES. INSTALL MID-BASS PCB ASSEMBLY (020-6997) TO THE BOTTOM USING 8-32 x 1 1/4 PPH (800-7124), 10 PLACES. APPLY GASKET TAPE (843-4773) TO TOP PERIMETER ON BOTTOM (55 IN). PLACE BOTTOM/PCB ASSEMBLY AT BOTTOM OF CABINET - DO NOT INSTALL.
6. SLIP BLUE AND GREEN MONSTER CABLE THRU A PC. OF FOAM TUBING (965-7172) FROM TWEETER PCB. SLIP 2 EA. BLACK AND RED BATTERY WIRES THRU A PC. OF FOAM TUBING FROM TWEETER PCB. SLIP WHITE & ORANGE MONSTER CABLE THRU A PC. OF FOAM TUBING FROM MIDRANGE PCB. WRAP THE LEADING END OF THE 3 PCS. OF FOAM AND LEAD EACH THRU THEIR RESPECTIVE HOLE IN THE MIDDLE BRACE (SEE DRAWING) AND OUT THE INPUT CUP HOLE. SOLDER EACH WIRE TO ITS MATING POSITION ON INPUT ASSEMBLY (017-6991) BOARD. ALL SOLDER CONNECTIONS USE ERSIN #SN63 (858-3097). HOTMELT (855-5751) BATTERY TERMINAL OPENINGS ON INPUT CUP.
7. LACE OUTPUT WIRES THROUGH SLOTS IN THE TOP OF THE CABINET ENCLOSURE. YEL, WHT AND BLU ON RIGHT AND BRN, ORG AND GRN ON THE LEFT. VIEWED FROM REAR (PG 2 OF 3).
8. MOUNT INPUT CUP ASSEMBLY USING 8-32 x 1/2 BSCH (800-4667), 4 PLACES. INSTALL (2) 9V BATTERIES (915-6992).
9. MOUNT INPUT PLATE (712-6984) USING 8-32 x 5/8 FSOH (800-7353), 4 PLACES.
10. MOUNT LEMIM USING 8-32 x 1 3/4 FSOH (800-7055), 6 PLACES.
11. PLACE HEATSHRINK (880-3453) OVER EACH WIRE AND SOLDER TO ITS MATING POSITION ON THE LEMIM (902-6840). YELLOW-POSITIVE, BROWN-NEGATIVE.
12. ADHERE TWO EMIM RISER PADS (844-5365) TO THE REAR OF THE EMIM (902-5339A). PLACE HEATSHRINK OVER EACH WIRE AND SOLDER TO ITS MATING POSITION ON THE EMIM, WHITE-POSITIVE, ORANGE-NEGATIVE.
13. MOUNT EMIM USING 8-32 x 1 1/4 FSOH (800-6968), 4 PLACES.
14. ADHERE EMIT RISER PAD (844-6990) TO THE REAR OF THE EMIT (902-5228). PLACE HEATSHRINK (880-3453) OVER POSITIVE WIRE (FROM XVR) AND SOLDER TO ITS MATING POSITION ON THE EMIT. BLUE-POSITIVE
15. STRIP AND TIN BOTH ENDS OF A 9" PIECE OF VIOLET MONSTER CABLE (603-3470).
16. PLACE HEATSHRINK OVER 9" WIRE AND SOLDER TO FRONT EMIT NEGATIVE TERMINAL.
17. MOUNT FRONT EMIT USING 8-32 x 1 1/4 FSOH (800-6968), 4 PLACES.
18. USING 2 SIDED TAPE (960-6847) ATTACH TWO DIAPERS (854-6983) TO EMIT FACE. ENSURE EMIT APERTURES ARE NOT COVERED BY TAPE.
19. SLIDE OTHER END OF 9" WIRE THROUGH THE RIGHT HOLE IN THE CABINET AND SLIDE GREEN NEGATIVE EMIT WIRE (FROM XVR) THROUGH THE LEFT HOLE IN THE CABINET (VIEWING FROM REAR OF CABINET). SEE WIRING DIAGRAM SH 2 OF 3.
20. PLACE HEATSHRINK OVER EACH WIRE AND SOLDER TO ITS MATING POSITION ON THE REAR EMIT. GREEN-POSITIVE, VIOLET-NEGATIVE.
21. MOUNT REAR EMIT USING 8-32 x 1 FSOH (800-7054), 1 PLACE.
22. USING AN X-ACTO KNIFE REMOVE 3/16" OF INSULATION FROM EACH OF THE REAR EMIT WIRES NEAR THE BOTTOM OF THE FRONT EMIT ROUTE (PG 2 OF 3).
23. SOLDER AN 8 OHM 5 W RESISTOR (140-0636) BETWEEN THE REAR EMIT WIRES.
24. HOTMELT RESISTOR TO THE BOTTOM OF THE EMIT ROUTE.
25. USING 2 SIDED TAPE (960-6847) ATTACH TWO DIAPERS (854-6983) TO EMIT FACE. ENSURE EMIT APERTURES ARE NOT COVERED BY TAPE.
26. MOUNT TY-WRAP MOUNTING BASE (861-7056), 2 PLACES, AS INDICATED, PULL WIRES TAUT AND MOUNT USING TY-WRAP (861-1499), 2 PLACES.
27. PULL ANY REMAINING WIRE SLACK INTO THE CABINET. SEAL WIRE SLOTS WITH HOTMELT.
28. LACE INPUT WIRES AND XLR WIRE FROM THE INPUT ASSEMBLY THROUGH THE WOOFER HOLE. PLACE HEATSHRINK OVER EACH WIRE AND SOLDER TO ITS MATING POSITION ON THE CONTROL WOOFER ASSEMBLY (028-7052). RED-POSITIVE, BLACK-NEGATIVE. SOLDER XLR WIRES AS INDICATED ON PAGE 2 OF 3. INSERT FROM COMPONENT SIDE.
29. EVENLY FILL CABINET ENCLOSURE WITH 800 GM. DACRON (875-1121).
30. MOUNT CONTROL WOOFER (028-7052) USING 10-32 x 1 PPH (800-6966), 8 PLACES.
31. ATTACH GRILLE ASSEMBLY (028-6720) TO FRONT OF CABINET WITH 8-32 x 1 1/4 ALN CAP SCREW (800-3970), 8 PLACES AND #8 FLAT WASHER (820-1013), 6 PLACES
32. COVER TOP TWO GRILLE SCREWS WITH HOLE PLUG (840-4615), 2 PLACES.
33. MOUNT BOTTOM USING 8-32 x 1 3/4 FSOH (800-7055), 7 PLACES.
34. INSTALL LOCKING RING (846-6930), SPIKED FOOT (846-6929) AND SPIKED FOOT COVER (760-7048) INTO BASE, 4 PLACES. ADJUST SPIKED FOOT SO CABINET IS LEVEL. TIGHTEN LOCKING RING AND FOOT COVER.
35. FROM FIBERGLASS KIT (876-7082) INSTALL FIBERGLASS, LEMIM LEFT/RIGHT (876-7080), PLACE FIBERGLASS, LEMIM CENTER (876-7081), BETWEEN LEFT AND RIGHT PIECES.
36. REINSTALL PANEL USING #8-1 PPH (801-3965), 4 PLACES.
37. FROM FIBERGLASS KIT INSTALL FIBERGLASS, EMIM (876-7083).
38. ATTACH REAR GRILLE ASSEMBLY (026-7085) TO REAR OF CABINET.
39. ATTACH TOP GRILLE ASSEMBLY (026-7086) TO TOP OF CABINET.
40. AFTER FINAL TEST, PLACE SERIAL NUMBER (957-7133) ON BOTTOM HORIZONTAL SURFACE OF INPUT CUP. ATTACH SOUND DAMPING (854-5868) TO CENTER OF REAR SURFACE OF SERVICE PLATE (712-6955). ATTACH SERVICE PLATE BY USING THUMB SCREW (809-9670) WITH #8 NYLON WASHER (822-7125), 4 PLACES. DO NOT USE THREAD LOCK ON THUMB SCREWS. ENSURE SERIAL NUMBER AND SERVICE PLATE HAVE MATCHING NUMBERS.

OCT 2 6 1994

Infinity Systems Inc.

EPSILON

FINAL ASSEMBLY

P/N: IF30003

DWG NO: IF30003-01987-00B

DRAWN BY: B. FRANK

DATE: 11-10-93 | SCALE: N/A

APPROVED: J.M. J.I. 3-11-94

CAD FILE NAME: FNLASSY1

TOLERANCES: ANG: ± = .5° FRACT. ± = 1/32

DECIMALS: .XX ± = .01 .XXX ± = .005

REVISION - F | SHEET 1 OF 3

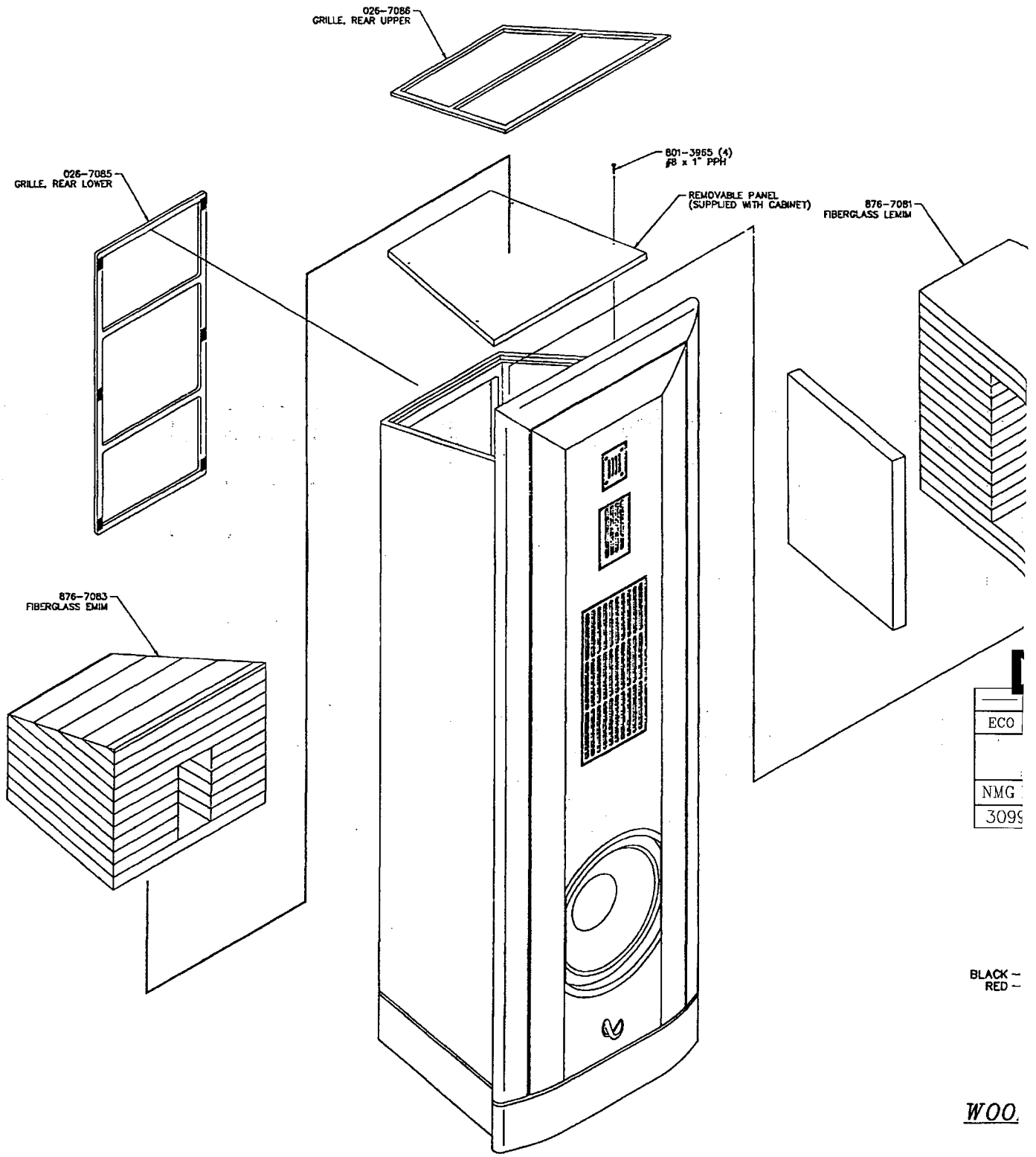

SEE NOTES 35 THRU 39 ON SHEET 1 OF 3

REVISIONS				
ECO	REV.	DESCRIPTION	DATE	APPROVED
		SEE PAGE 1 OF 3		

INFINITY SYSTEMS, INC. PROPRIETARY

This document contains confidential and proprietary information that is the property of Infinity Systems, Inc. and may not be disclosed to or duplicated for others except as authorized by Infinity Systems, Inc.

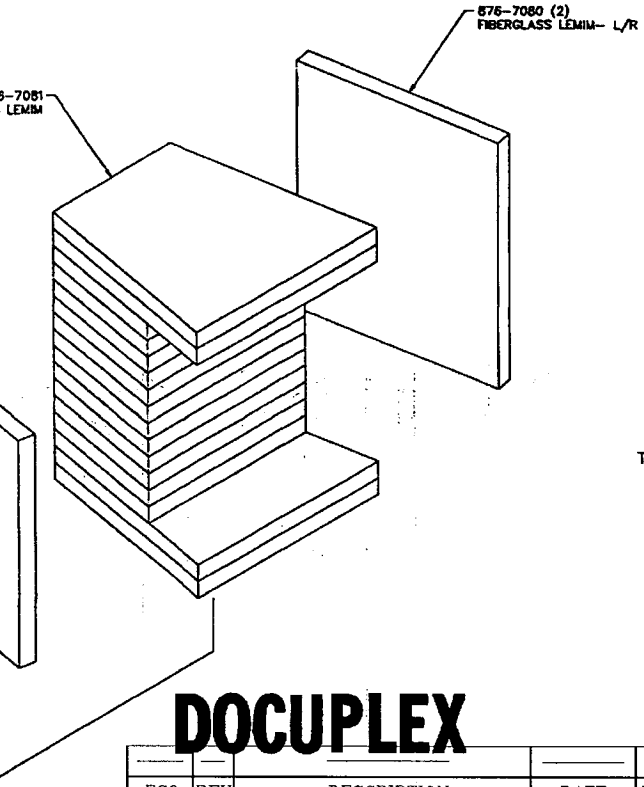

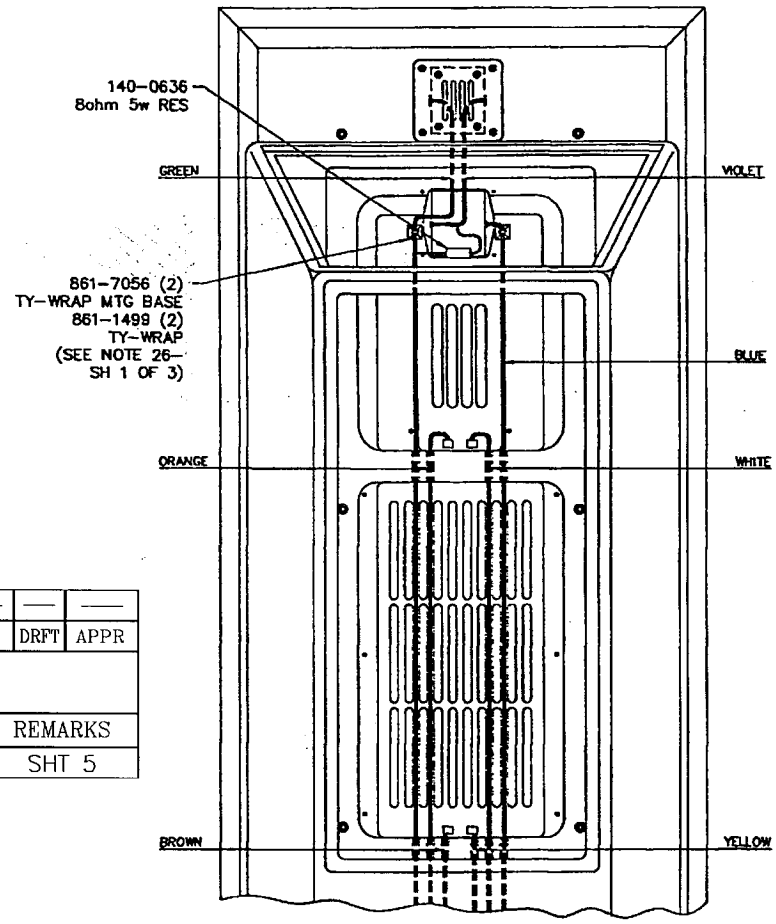

WIRING DIAGRAM

DOCUPLEX

ECO	REV	DESCRIPTION	DATE	DRFT	APPR

NMG IDENTIFICATION

NMG PART NO.	DESCRIPTION	REMARKS
309903-002	S/M, EPSILON, IF30003A	SHT 5

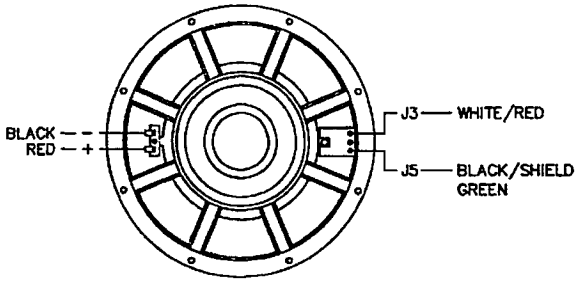

WOOFER WIRING DIAGRAM

FEB 27 1995

Infinity Systems Inc.

EPSILON	
FINAL ASSEMBLY	
P/N: IF30003A	
DWG NO: IF30003A-02200-498	
DRAWN BY: B. FRANK	
DATE: 02-23-95	SCALE: N/A
APPROVED:	
CAD FILE NAME: FNLASYA2	
TOLERANCES: ANG: ± = .5° FRACT. ± = 1/32 DECIMALS: .XX ± = .01 .XXX ± = .005	
REVISION : A	SHEET: 2 OF 3

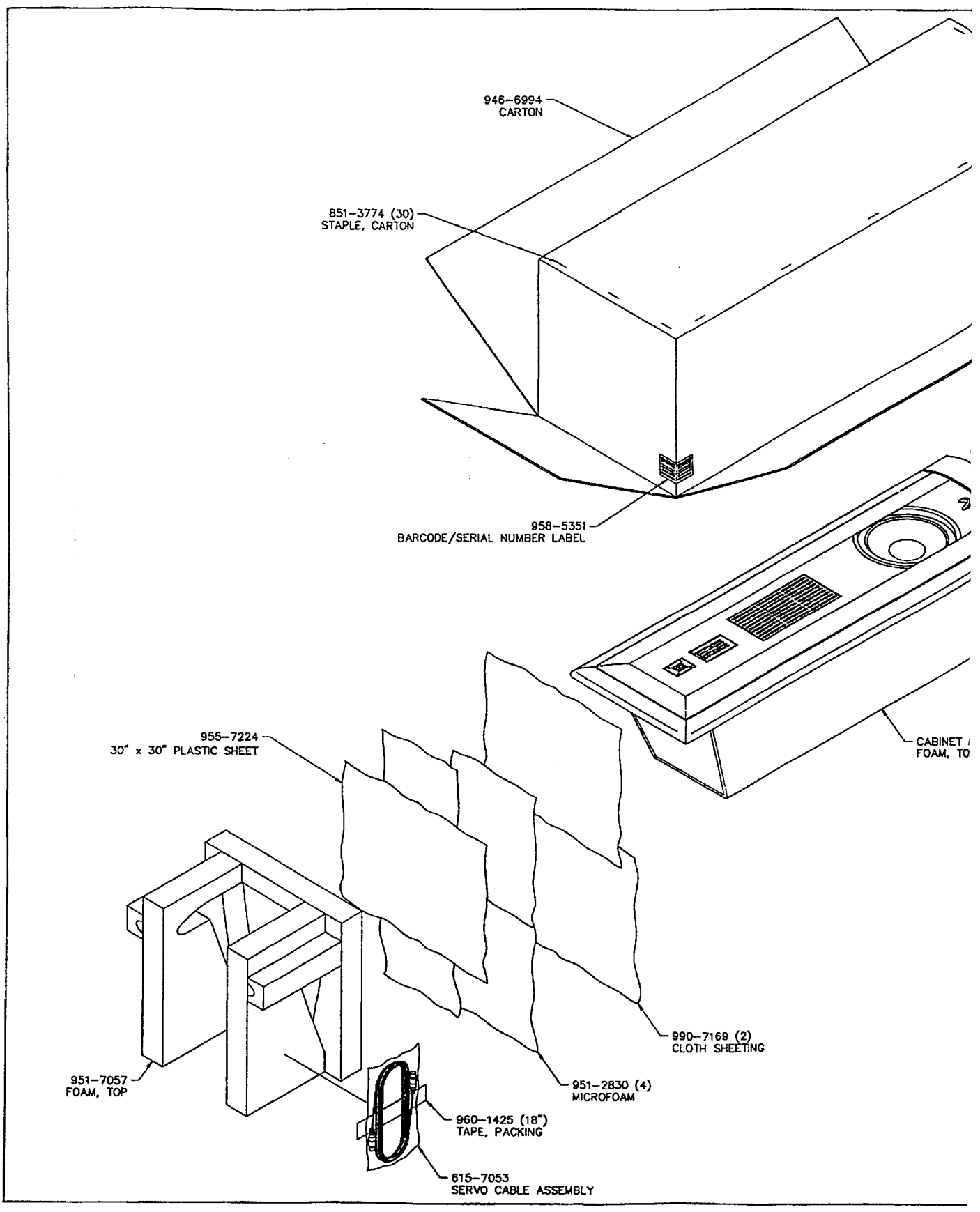
946-6994
CARTON
851-3774 (30)
STAPLE, CARTON
958-5351
BARCODE/SERIAL NUMBER LABEL
CABINET
FOAM, TO
955-7224
30" x 30" PLASTIC SHEET
990-7169 (2)
CLOTH SHEETING
951-7057
FOAM, TOP
951-2830 (4)
MICROFOAM
960-1425 (18")
TAPE, PACKING
615-7053
SERVO CABLE ASSEMBLY

REVISIONS				
ECO	REV.	DESCRIPTION	DATE	APPROVED
		SEE PAGE 1 OF 3		

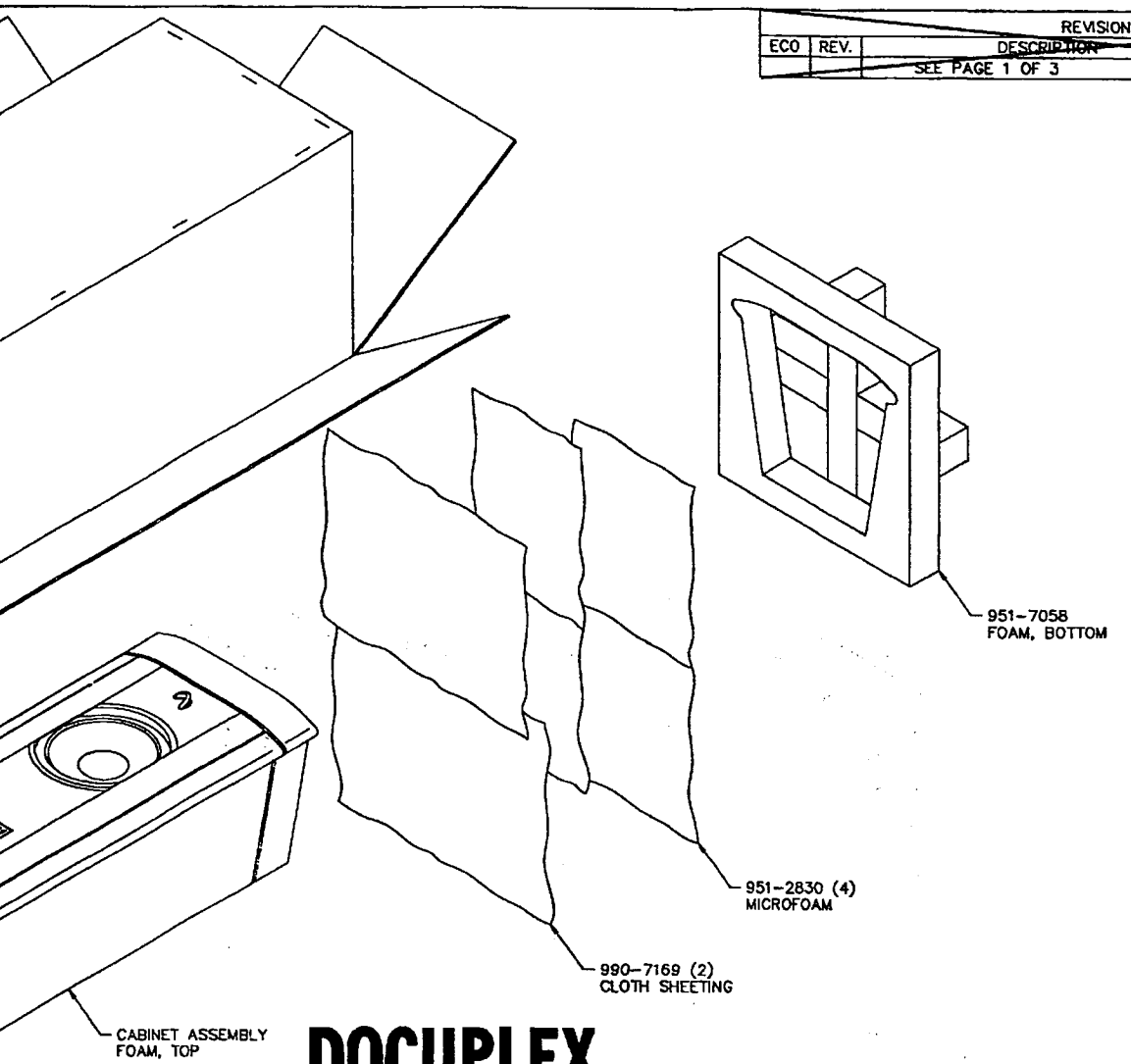

FEB 27 1995

DOCUPLEX

ECO	REV	DESCRIPTION	DATE	DRFT	APPR

NMG IDENTIFICATION

NMG PART NO.	DESCRIPTION	REMARKS
309903-002	S/M, EPSILON, IF30003A	SHT 6

INFINITY SYSTEMS, INC. PROPRIETARY

This document contains confidential and proprietary information that is the property of Infinity Systems, Inc. and may not be disclosed to or duplicated for others except as authorized by Infinity Systems, Inc

NOTES:
1. LAY CABINET ON RAISED 3" HIGH CARPETED FIXTURE. USE CARE TO AVOID BINDING POSTS.
2. PLACE MICROFOAM SHEETING (951-2830) OVER BOTTOM FOAM (951-7058), 4 PLACES.
3. PLACE CLOTH SHEETING (990-7169) OVER MICROFOAM ON BOTTOM FOAM, 2 PLACES.
4. PLACE BOTTOM FOAM WITH SHEETING ON BOTTOM OF CABINET.
5. LAY CLOTH SHEETING OVER THE TOP OF THE CABINET, 2 PLACES.
6. LAY MICROFOAM OVER THE CLOTH SHEETING, 4 PLACES FOLLOWED BY PLASTIC SHEET (955-7224), 1 PLACE AS SHOWN.
7. SLIDE FOAM, TOP (951-7057) OVER TOP OF CABINET, ENSURE SHEETING REMAINS BETWEEN CABINET AND FOAM.
8. USING TAPE (960-1425) MOUNT SERVO CABLE ASSEMBLY (615-7053) TO SIDE OF TOP FOAM.
9. FOLD CARTON (946-6994) END FLAPS AND INNER SIDE FLAP AND STAPLE 4 PLACES. FOLD OUTER SIDE FLAP AND STAPLE 3 PLACES ALONG EACH SHORT EDGE AND STAPLE 5 PLACES ALONG THE LONG EDGE.
10. PLACE CARTON OVER CABINET/FOAM ASSEMBLY.
11. ROLL CARTON OVER ONTO ITS TOP.
12. FOLD CARTON BOTTOM AND REPEAT NOTE 10.
13. PLACE BARCODE/SERIAL NUMBER LABEL (958-5351) ON CARTON AS INDICATED.

DOCUPLEX

Infinity Systems Inc.	
EPSILON	
FINAL ASSEMBLY	
P/N: IF30003A	
DWG NO: IF30003A-02200-498	
DRAWN BY: B. FRANK	
DATE: 02-23-95	SCALE: N/A
APPROVED:	
CAD FILE NAME: FNLASYA3	
TOLERANCES: ANG: ± = .5° FRACT. ± = 1/32 DECIMALS: .XX ± = .01 .XXX ± = .005	
REVISION: A	SHEET 3 OF 3

INFINITY SYSTEMS, INC. PROPRIETARY

This document contains confidential and proprietary information that is the property of Infinity Systems, Inc. and may not be disclosed to or duplicated for others except as authorized by Infinity Systems, Inc

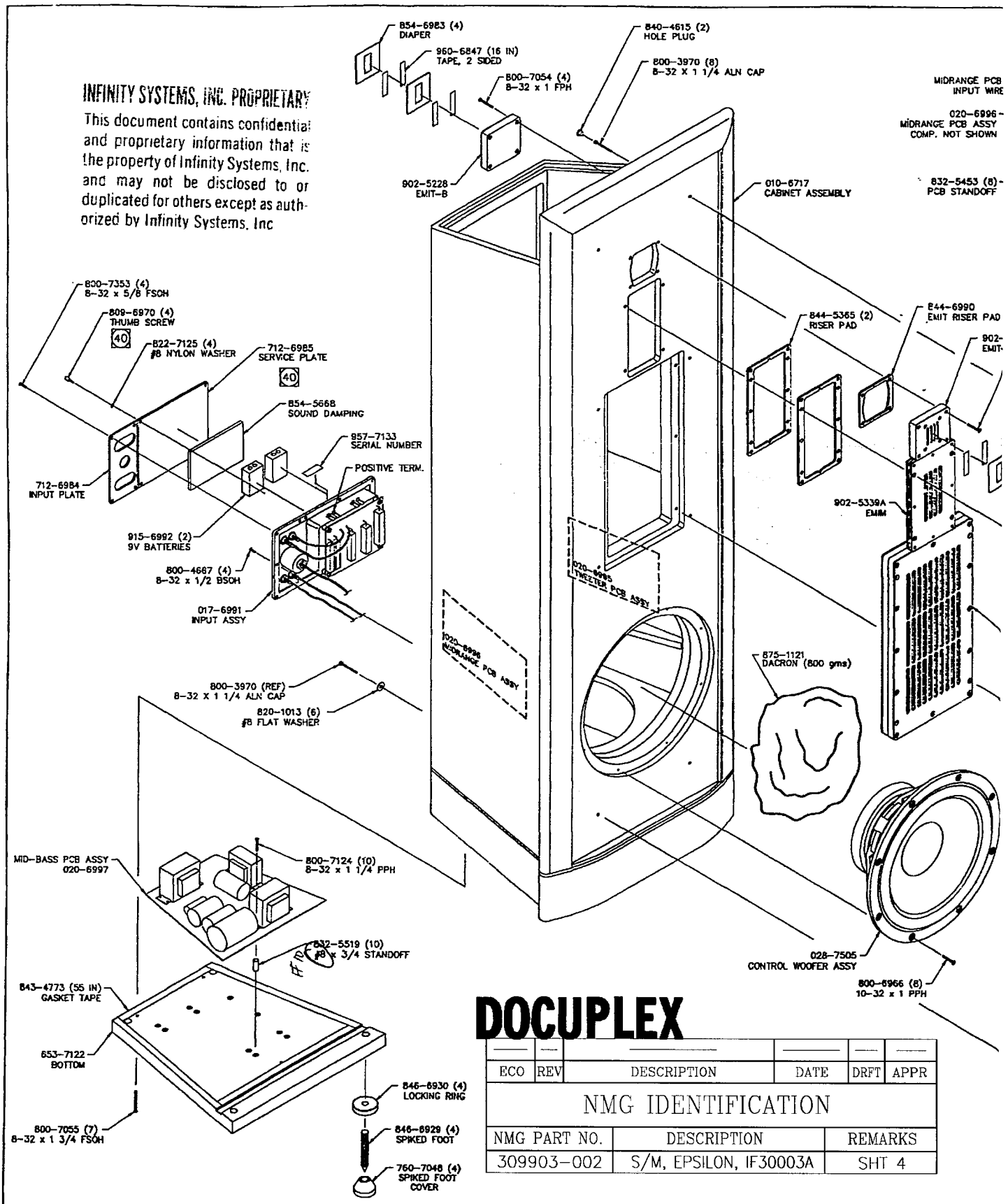

DOCUPLEX

ECO	REV	DESCRIPTION	DATE	DRFT	APPR

NMG IDENTIFICATION

NMG PART NO.	DESCRIPTION	REMARKS
309903-002	S/M, EPSILON, IF30003A	SHT 4

REVISIONS				
ECO	REV.	DESCRIPTION	DATE	APPROVED
1341	A	RELEASED FOR PRODUCTION	02-23-95	

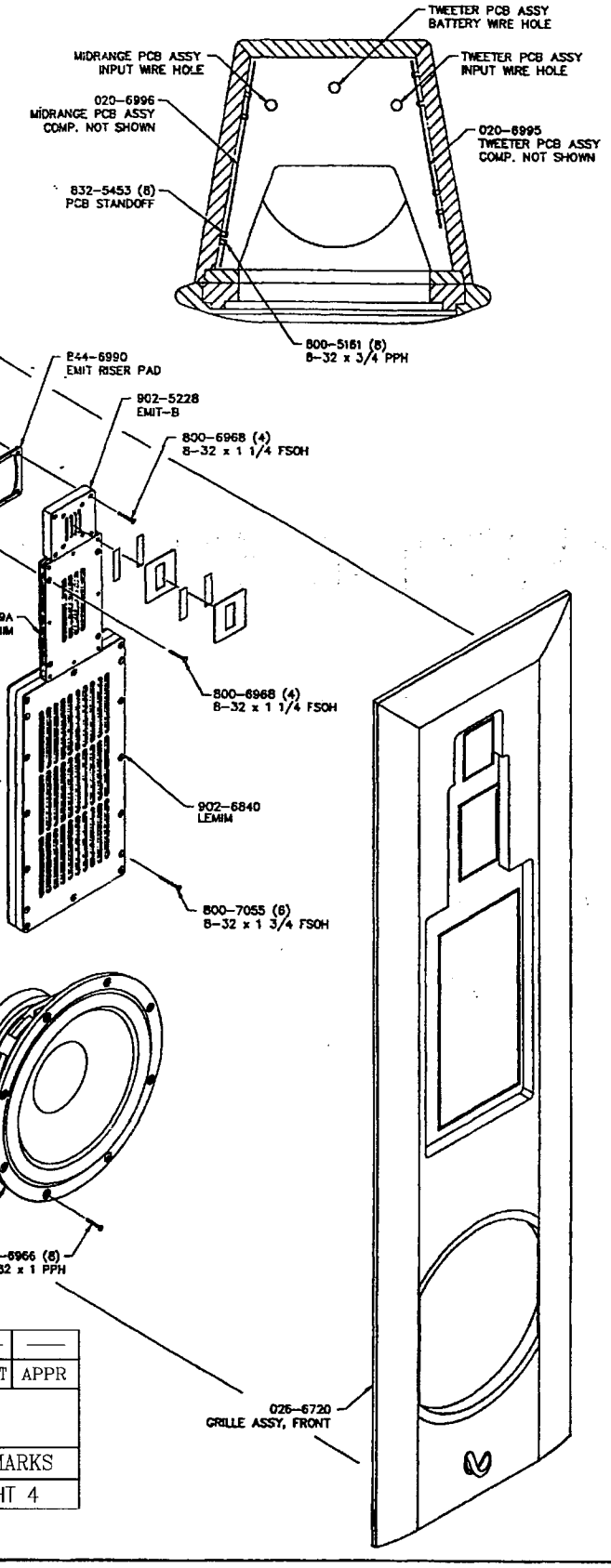

NOTES:

1. REMOVE (2) TEMPORARY SCREWS HOLDING PANEL (BETWEEN EMIM & LEMIM). REMOVE PANEL AND DISCARD SCREWS.
2. INSERT PCB STANDOFFS (832-5453) INTO PCB FROM THE BOTTOM SIDE OF TWEETER PCB ASSEMBLY (020-6995) AND TO MIDRANGE PCB ASSEMBLY (020-6996), 4 PLACES EACH.
3. AS INDICATED, INSTALL TWEETER PCB ASSEMBLY USING 8-32 x 3/4 PPH (800-5161). 4 PLACES. USE THREAD LOCK (855-7136) ON ALL MACHINE SCREWS, EXCEPT AS NOTED.
4. AS INDICATED, INSTALL MIDRANGE PCB ASSEMBLY USING 8-32 x 3/4 PPH (800-5161), 4 PLACES.
5. PLACE #8 x 3/4 STANDOFF (832-5519) IN EACH C'BORE ON BOTTOM (853-7122), 10 PLACES. INSTALL MID-BASS PCB ASSEMBLY (020-6997) TO THE BOTTOM USING 8-32 x 1 1/4 PPH (800-7124), 10 PLACES. APPLY GASKET TAPE (843-4773) TO TOP PERIMETER ON BOTTOM (55 IN). PLACE BOTTOM/PCB ASSEMBLY AT BOTTOM OF CABINET - DO NOT INSTALL.
6. SLIP BLUE AND GREEN MONSTER CABLE THRU A PC. OF FOAM TUBING (965-7172) FROM TWEETER PCB. SLIP 2 EA. BLACK AND RED BATTERY WIRES THRU A PC. OF FOAM TUBING FROM TWEETER PCB. SLIP WHITE & ORANGE MONSTER CABLE THRU A PC. OF FOAM TUBING FROM MIDRANGE PCB. WRAP THE LEADING END OF THE 3 PCS. OF FOAM AND LEAD EACH THRU THEIR RESPECTIVE HOLE IN THE MIDDLE BRACE (SEE DRAWING) AND OUT THE INPUT CUP HOLE. SOLDER EACH WIRE TO ITS MATING POSITION ON INPUT ASSEMBLY (017-6991) BOARD. ALL SOLDER CONNECTIONS USE ERSIN #SN63 (858-3097). HOTMELT (855-5751) BATTERY TERMINAL OPENINGS ON INPUT CUP.
7. LACE OUTPUT WIRES THROUGH SLOTS IN THE TOP OF THE CABINET ENCLOSURE. YEL, WHT AND BLU ON RIGHT AND BRN, ORG AND GRN ON THE LEFT. VIEWED FROM REAR (PG 2 OF 3).
8. MOUNT INPUT CUP ASSEMBLY USING 8-32 x 1/2 BSOH (800-4667), 4 PLACES. INSTALL (2) 9V BATTERIES (915-5992).
9. MOUNT INPUT PLATE (712-6984) USING 8-32 x 5/8 FSOH (800-7353), 4 PLACES.
10. MOUNT LEMIM USING 8-32 x 1 3/4 FSOH (800-7055), 6 PLACES.
11. PLACE HEATSHRINK (880-3453) OVER EACH WIRE AND SOLDER TO ITS MATING POSITION ON THE LEMIM (902-6840), YELLOW-POSITIVE, BROWN-NEGATIVE.
12. ADHERE TWO EMIM RISER PADS (844-5365) TO THE REAR OF THE EMIM (902-5339A). PLACE HEATSHRINK OVER EACH WIRE AND SOLDER TO ITS MATING POSITION ON THE EMIM, WHITE-POSITIVE, ORANGE-NEGATIVE.
13. MOUNT EMIM USING 8-32 x 1 1/4 FSOH (800-6968), 4 PLACES.
14. ADHERE EMIT RISER PAD (844-6990) TO THE REAR OF THE EMIT (902-5228). PLACE HEATSHRINK (880-3453) OVER POSITIVE WIRE (FROM XVR) AND SOLDER TO ITS MATING POSITION ON THE EMIT. BLUE-POSITIVE
15. STRIP AND TIN BOTH ENDS OF A 9" PIECE OF VIOLET MONSTER CABLE (603-3470).
16. PLACE HEATSHRINK OVER 9" WIRE AND SOLDER TO FRONT EMIT NEGATIVE TERMINAL.
17. MOUNT FRONT EMIT USING 8-32 x 1 1/4 FSOH (800-6968), 4 PLACES.
18. USING 2 SIDED TAPE (960-6847) ATTACH TWO DIAPERS (854-6983) TO EMIT FACE. ENSURE EMIT APERTURES ARE NOT COVERED BY TAPE.
19. SLIDE OTHER END OF 9" WIRE THROUGH THE RIGHT HOLE IN THE CABINET AND SLIDE GREEN NEGATIVE EMIT WIRE (FROM XVR) THROUGH THE LEFT HOLE IN THE CABINET (VIEWING FROM REAR OF CABINET). SEE WIRING DIAGRAM SH 2 OF 3.
20. PLACE HEATSHRINK OVER EACH WIRE AND SOLDER TO ITS MATING POSITION ON THE REAR EMIT. GREEN-POSITIVE, VIOLET-NEGATIVE.
21. MOUNT REAR EMIT USING 8-32 x 1 FSOH (800-7054), 1 PLACE.
22. USING AN X-ACTO KNIFE REMOVE 3/16" OF INSULATION FROM EACH OF THE REAR EMIT WIRES NEAR THE BOTTOM OF THE FRONT EMIT ROUTE (PG 2 OF 3).
23. SOLDER AN 8 OHM 5 W RESISTOR (140-0636) BETWEEN THE REAR EMIT WIRES.
24. HOTMELT RESISTOR TO THE BOTTOM OF THE EMIT ROUTE.
25. USING 2 SIDED TAPE (960-6847) ATTACH TWO DIAPERS (854-6983) TO EMIT FACE. ENSURE EMIT APERTURES ARE NOT COVERED BY TAPE.
26. MOUNT TY-WRAP MOUNTING BASE (861-7056), 2 PLACES. AS INDICATED, PULL WIRES TAUT AND MOUNT USING TY-WRAP (861-1499), 2 PLACES.
27. PULL ANY REMAINING WIRE SLACK INTO THE CABINET. SEAL WIRE SLOTS WITH HOTMELT.
28. LACE INPUT WIRES AND XLR WIRE FROM THE INPUT ASSEMBLY THROUGH THE WOOFER HOLE. PLACE HEATSHRINK OVER EACH WIRE AND SOLDER TO ITS MATING POSITION ON THE CONTROL WOOFER ASSEMBLY (026-7505). RED-POSITIVE, BLACK-NEGATIVE. SOLDER XLR WIRES AS INDICATED ON PAGE 2 OF 3, INSERT FROM COMPONENT SIDE.
29. EVENLY FILL CABINET ENCLOSURE WITH 800 GM. DACRON (875-1121).
30. MOUNT CONTROL WOOFER USING 10-32 x 1 PPH (800-6966), 8 PLACES.
31. ATTACH GRILLE ASSEMBLY (026-6720) TO FRONT OF CABINET WITH 8-32 x 1 1/4 ALN CAP SCREW (800-3970), 8 PLACES AND #8 FLAT WASHER (820-1013), 6 PLACES
32. COVER TOP TWO GRILLE SCREWS WITH HOLE PLUG (840-4615), 2 PLACES.
33. MOUNT BOTTOM USING 8-32 x 1 3/4 FSOH (800-7055), 7 PLACES.
34. INSTALL LOCKING RING (846-6930), SPIKED FOOT (846-6929) AND SPIKED FOOT COVER (760-7048) INTO BASE, 4 PLACES. ADJUST SPIKED FOOT SO CABINET IS LEVEL. TIGHTEN LOCKING RING AND FOOT COVER.
35. FROM FIBERGLASS KIT (876-7082) INSTALL FIBERGLASS, LEMIM LEFT/RIGHT (876-7080). PLACE FIBERGLASS, LEMIM CENTER (876-7081), BETWEEN LEFT AND RIGHT PIECES.
36. REINSTALL PANEL USING #8-1 PPH (801-3965), 4 PLACES.
37. FROM FIBERGLASS KIT INSTALL FIBERGLASS, EMIM (876-7083).
38. ATTACH REAR GRILLE ASSEMBLY (026-7085) TO REAR OF CABINET.
39. ATTACH TOP GRILLE ASSEMBLY (026-7086) TO TOP OF CABINET.
40. AFTER FINAL TEST, PLACE SERIAL NUMBER (957-7133) ON BOTTOM HORIZONTAL SURFACE OF INPUT CUP. ATTACH SOUND DAMPING (854-5668) TO CENTER OF REAR SURFACE OF SERVICE PLATE (712-6985). ATTACH SERVICE PLATE BY USING THUMB SCREW (809-9670) WITH #8 NYLON WASHER (822-7125), 4 PLACES. DO NOT USE THREAD LOCK ON THUMB SCREWS. ENSURE SERIAL NUMBER AND SERVICE PLATE HAVE MATCHING NUMBERS.

FEB 27 1995

Infinity Systems Inc.	
EPSILON	
FINAL ASSEMBLY	
P/N: IF30003A	
DWG NO: IF30003A-02200-10B	
DRAWN BY: B. FRANK	
DATE: 02-23-95	SCALE: N/A
APPROVED:	
CAD FILE NAME: FNLASYA1	
TOLERANCES: ANG: ± = .5° FRACT. ± = 1/32 DECIMALS: .XX ± = .01 .XXX ± = .005	
REVISION : A	SHEET: 1 OF 3

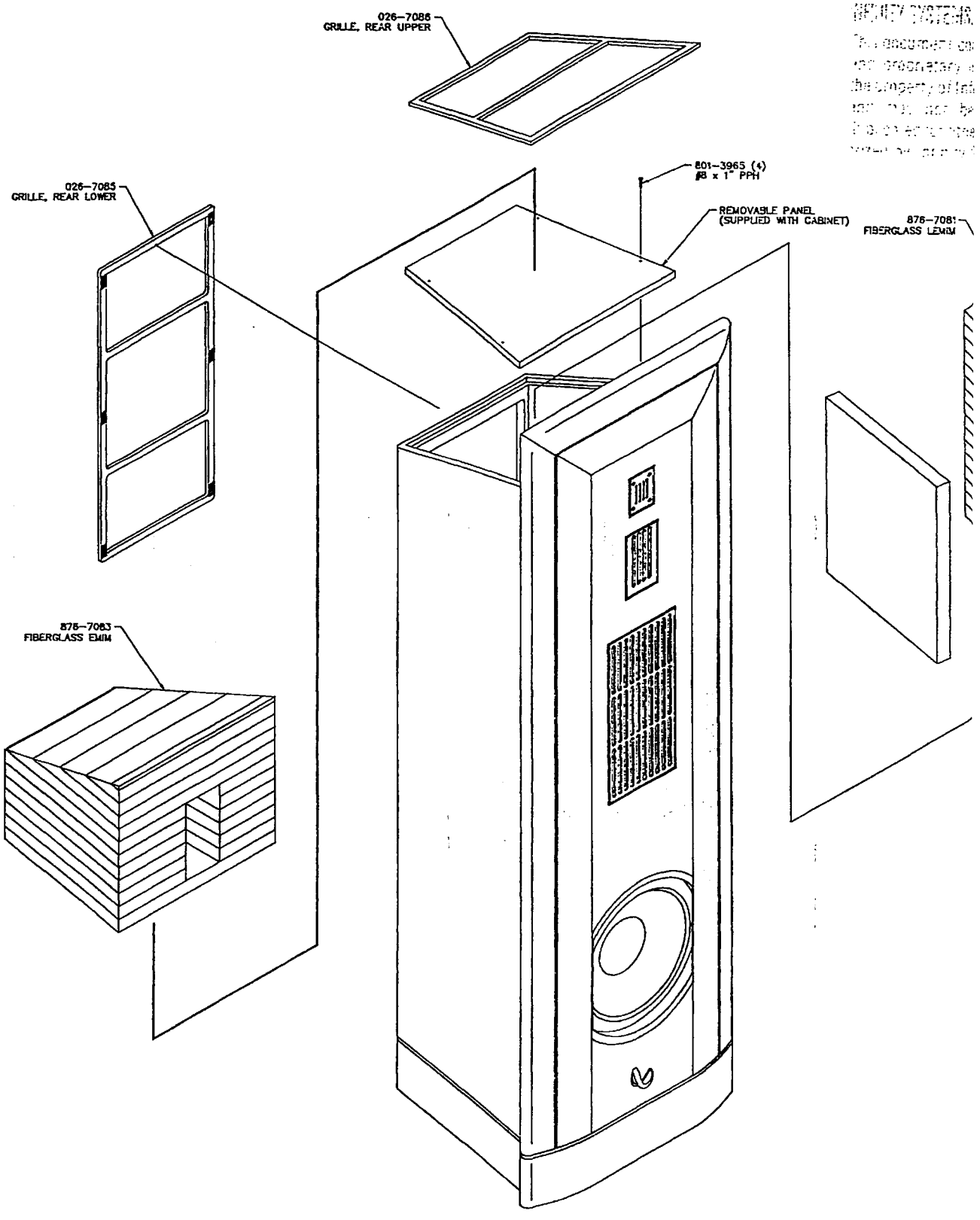

SEE NOTES 35 THRU 39 ON SHEET 1 OF 3

REVISIONS				
ECO	REV.	DESCRIPTION	DATE	APPROVED
		SEE PAGE 1 OF 3		

INFINITY SYSTEMS, INC. [illegible]
This document contains [illegible] proprietary information [illegible] the property of Infinity Systems [illegible] not to be disclosed [illegible] without the express [illegible] Infinity Systems, Inc.

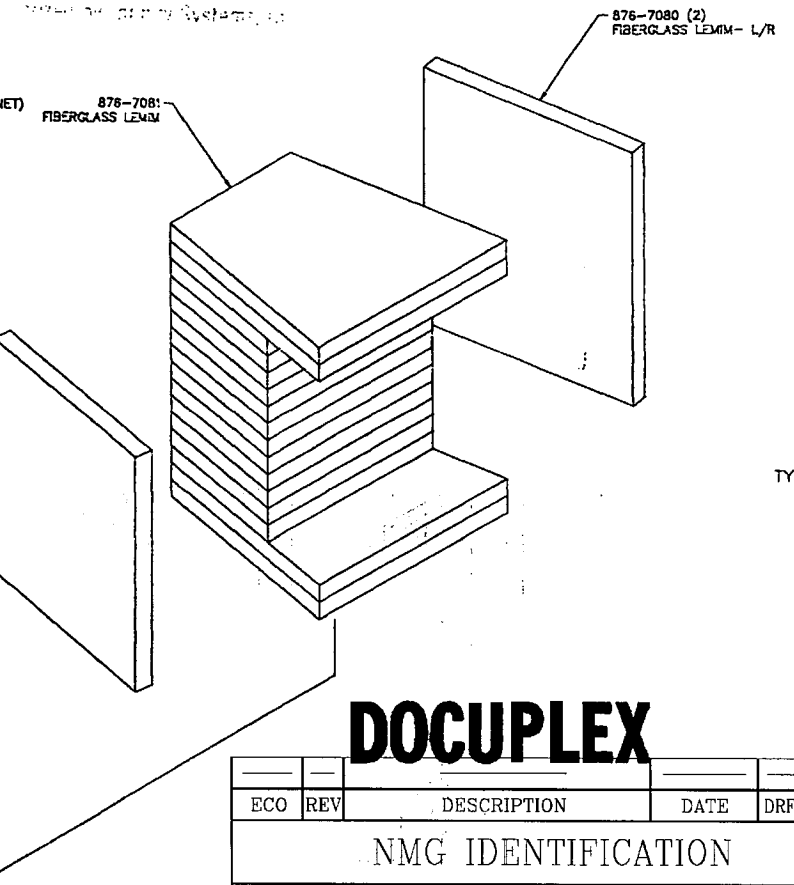

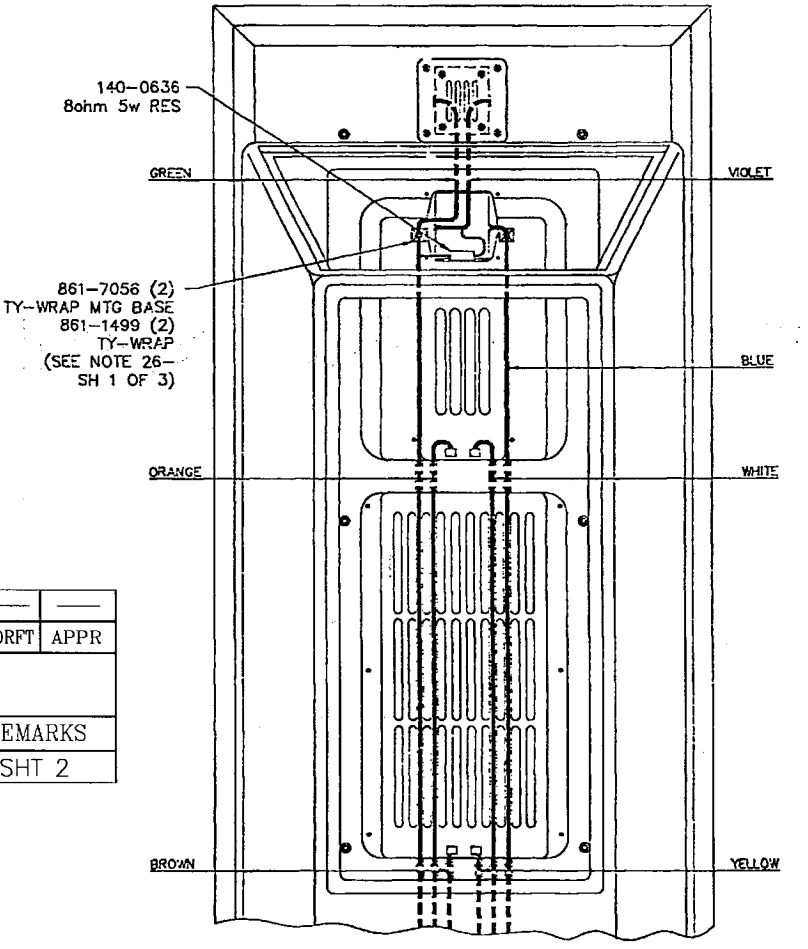

WIRING DIAGRAM

DOCUPLEX

ECO	REV	DESCRIPTION	DATE	DRFT	APPR
NMG IDENTIFICATION					
NMG PART NO.		DESCRIPTION		REMARKS	
309903-001		S/M, EPSILON, IF30003		SHT 2	

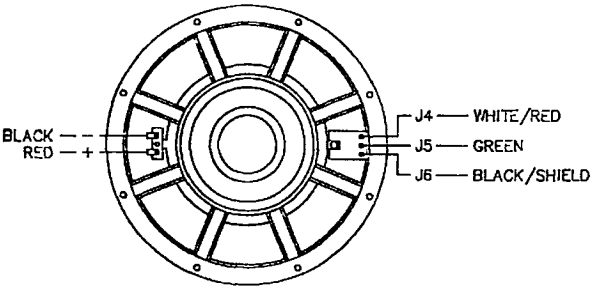

WOOFER WIRING DIAGRAM

OCT 2 6 1994

Infinity Systems Inc.	
EPSILON	
FINAL ASSEMBLY	
P/N: IF30003	
DWG NO: IF30003-01987-498	
DRAWN BY: B. FRANK	
DATE: 11-10-93	SCALE: N/A
APPROVED:	
CAD FILE NAME: FNLASSY2	
TOLERANCES: ANG: ± = .5° FRACT. ± = 1/32 DECIMALS: .XX ± = .01 .XXX ± = .005	
REVISION : F	SHEET: 2 OF 3

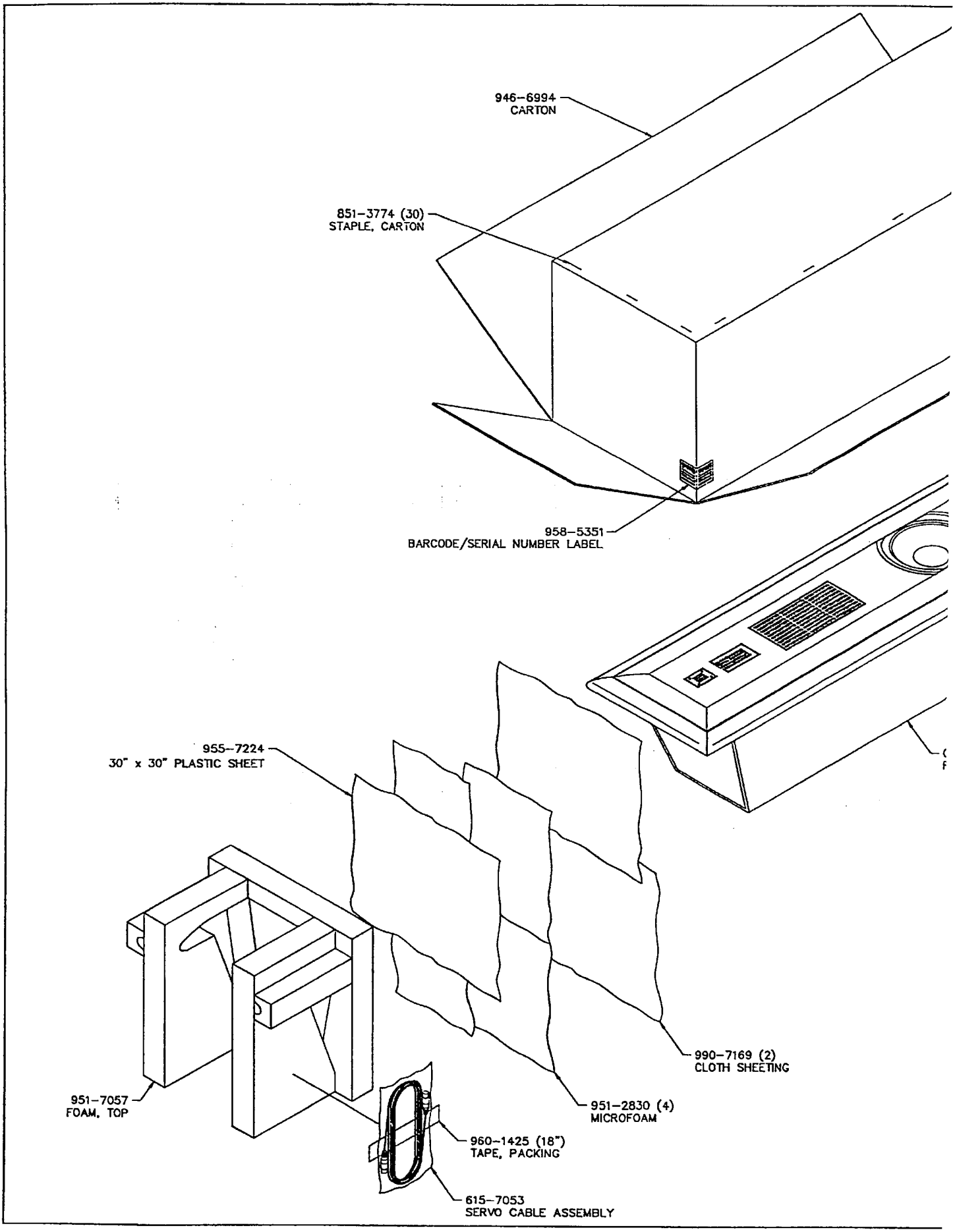
946-6994
CARTON
851-3774 (30)
STAPLE, CARTON
958-5351
BARCODE/SERIAL NUMBER LABEL
955-7224
30" x 30" PLASTIC SHEET
990-7169 (2)
CLOTH SHEETING
951-7057
FOAM, TOP
951-2830 (4)
MICROFOAM
960-1425 (18")
TAPE, PACKING
615-7053
SERVO CABLE ASSEMBLY

REVISIONS				
ECO	REV.	DESCRIPTION	DATE	APPROVED
		SEE PAGE 1 OF 3		

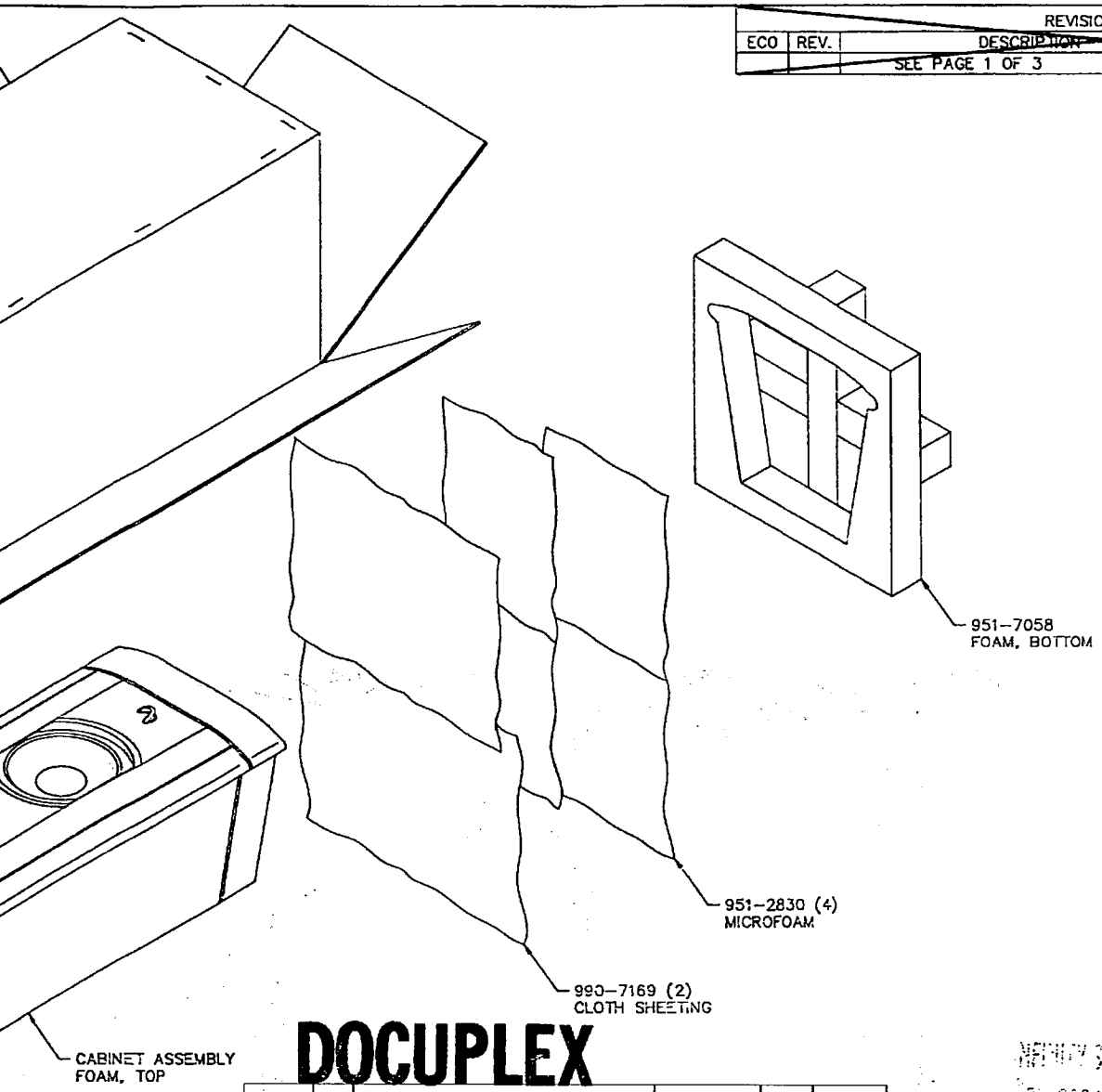

OCT 2 6 1994

DOCUPLEX

ECO	REV	DESCRIPTION	DATE	DRFT	APPR
NMG IDENTIFICATION					
NMG PART NO.		DESCRIPTION		REMARKS	
309903-001		S/M, EPSILON, IF30003		SHT 3	

INFINITY SYSTEMS, INC. PROPRIETARY
This document contains confidential and proprietary information that is the property of Infinity Systems, Inc. and may not be disclosed to or reproduced for others except as authorized by Infinity Systems, Inc.

NOTES:
1. LAY CABINET ON RAISED 3" HIGH CARPETED FIXTURE. USE CARE TO AVOID BINDING POSTS.
2. PLACE MICROFOAM SHEETING (951-2830) OVER BOTTOM FOAM (951-7058), 4 PLACES.
3. PLACE CLOTH SHEETING (990-7169) OVER MICROFOAM ON BOTTOM FOAM, 2 PLACES.
4. PLACE BOTTOM FOAM WITH SHEETING ON BOTTOM OF CABINET.
5. LAY CLOTH SHEETING OVER THE TOP OF THE CABINET, 2 PLACES.
6. LAY MICROFOAM OVER THE CLOTH SHEETING, 4 PLACES FOLLOWED BY PLASTIC SHEET (955-7224), 1 PLACE AS SHOWN.
7. SLIDE FOAM, TOP (951-7057) OVER TOP OF CABINET, ENSURE SHEETING REMAINS BETWEEN CABINET AND FOAM.
8. USING TAPE (960-1425) MOUNT SERVO CABLE ASSEMBLY (615-7053) TO SIDE OF TOP FOAM.
9. FOLD CARTON (946-6994) END FLAPS AND INNER SIDE FLAP AND STAPLE 4 PLACES. FOLD OUTER SIDE FLAP AND STAPLE 3 PLACES ALONG EACH SHORT EDGE AND STAPLE 5 PLACES ALONG THE LONG EDGE.
10. PLACE CARTON OVER CABINET/FOAM ASSEMBLY.
11. ROLL CARTON OVER ONTO ITS TOP.
12. FOLD CARTON BOTTOM AND REPEAT NOTE 10.
13. PLACE BARCODE/SERIAL NUMBER LABEL (958-5351) ON CARTON AS INDICATED.

Infinity Systems Inc.	
EPSILON	
FINAL ASSEMBLY	
P/N: IF30003	
DWG NO: IF30003-01987-498	
DRAWN BY: B. FRANK	
DATE: 03-10-94	SCALE: N/A
APPROVED:	
CAD FILE NAME: FNLASSY3	
TOLERANCES: ANG: ± = .5° FRACT. ± = 1/32 DECIMALS: .XX ± = .01 .XXX ± = .005	
REVISION: F	SHEET 3 OF 3